CCRFQ FS HVACELEC 25_1
DOWNSVIEW CAMPUS, SERVER ROOM 2220 UPGRADES
ADDENDUM #2

November 11, 2025

Dear Respondents,

This addendum addresses updates to the Electrical and Mechanical Drawings and Specifications:

1. Please see attached Addendum M-01, two (2) pages in total.
2. Please see attached Addendum E-02, four (4) pages in total.

All other terms and conditions of the original request for proposal document & supporting documents remain valid and unchanged.

Thank You & Best Regards

End of Addendum #2

ADDENDUM

M-01

Architect:	N/A	Date:	November 10th, 2025
Project:	UPS and Cooling Assessment at Downsview Campus	Project No.:	25-007

This addendum forms part of the contract documents and amends the original bidding requirements, drawings and specifications noted below.

1. **Mechanical**

1.1 Drawings:

.1 Refer to Drawings M600

- Notes added to cooling unit's schedule: "C/W BACNET CARD CAPABLE OF STATUS INPUT TO BAS. COORDINATE WITH BASE BUILDING CONTROLS". To allow units to be controlled via independent thermostat control with existing in space humidity and temperature sensor tied back to the BAS to remain. Additional BAS input for equipment status of each new VRF unit is required

END OF ADDENDUM M-01

VRF FAN COIL UNIT SCHEDULE

SYMBOL	LOCATION	MOUNTING	TOTAL COOLING (KW)	TOTAL HEATING (KW)	VOLTAGE/PH/HZ	MCA	WEIGHT (KG)	MANUFACTURER AND MODEL (BASIS OF DESIGN: MITSUBISHI AIR)
FC-1 TO FC-4	IT ROOM - 2220	CEILING	5. 3	N/A	208, 1- Phase, 60 Hz	0.54	25	MITSUBISHI ELECTRIC: PLFY-EP18NEMU-E1R1-T C/W CONDENSATE PUMP. WIRED TO NEW COMMON THERMOSTAT: C/W BACNET CARD CAPABLE OF STATUS INPUT TO BAS. COORDINATE WITH BASE BUILDING CONTROLS
FC-5 TO FC-9	IT ROOM - 2220	WALL	8.8	N/A	208, 1- Phase, 60 Hz	0.63	21	MITSUBISHI ELECTRIC: PKFY-P30NKMU-E2-TH C/W CONDENSATE PUMP. WIRED TO NEW COMMON THERMOSTAT: C/W BACNET CARD CAPABLE OF STATUS INPUT TO BAS. COORDINATE WITH BASE BUILDING CONTROLS

VRF OUTDOOR UNIT SCHEDULE

SYMBOL	LOCATION	TOTAL COOLING (KW)	TOTAL HEATING (KW)	VOLTAGE/PH/HZ	MCA	MOCP	WEIGHT (KG)	MANUFACTURER AND MODEL (BASIS OF DESIGN: MITSUBISHI AIR)
VRF-1 TO VRF-3	ROOF	21.1	N/A	575V, 3- Phase, 60 Hz	11	15	222	MITSUBISHI ELECTRIC: PUHY-P72ZKMU-B (-BS) C/W LOW AMBIENT COOLING KIT; HOOD WITH CONTROL DAMPER ASSEMBLY & WIND DEFLECTORS. C/W BACNET CARD CAPABLE OF STATUS INPUT TO BAS. COORDINATE WITH BASE BUILDING CONTROLS

1 / M600 MECHNICAL SCHEDULES
SCALE: N.T.S.

CENTENNIAL COLLEGE DOWNSVIEW CAMPUS IT ROOM UPGRADES

CITY MULTI
SYSTEM SCHEMATIC DWG.

Appropriate Circuit Protection Device in accordance with local government regulations are mandatory required such as GFI(Ground fault type) and WB etc.
Please refer the amount of pre-charge and the formula of calculation which is mentioned on the data book.
1.25mm (16 AWG) - 1.25mm (16 AWG) or more. 1.25mm (16 AWG) - 1.25mm (16 AWG) or more.
Warning: HVRF pipe size is dependent on pipe length, please confirm before implementation.

DIAGRAM SYMBOL LEGEND	
DISPLAY	DESCRIPTION
-//- -//-	POWER WIRE
———	CONTROL WIRE
-----/-----	REF PIPE / WATER PIPE
—//—	POWER SIGNAL WIRE

CONT.No | PAGE

The symbol of surface judgement

Grade	Definition
#1	Standard
#2	Trable if ind performance will be affected.
#3	Trable if Refrigerant leaks will be limited.
#4	Trable if Piping length will be limited.
#5	Piping length and vertical equation will be limited.

PIPING LIST	
SYMBOL	BRANCH PIPE MODEL NAME
J1	CMY-Y102LS-G2
J2	CMY-Y102SS-G2
SYMBOL	LIQUID PIPE/GAS PIPE SIZE
P1	3/8"/3/8"
P2	1/4"/1/2"
P3	3/8"/3/4"
P4	3/8"/5/8"

Address | Additional Refrigerant

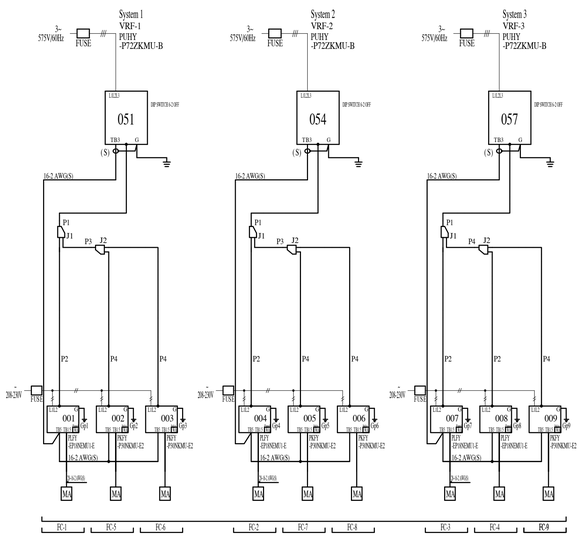

2 / M600 VRF PIPING SCHEMATIC
SCALE: N.T.S.

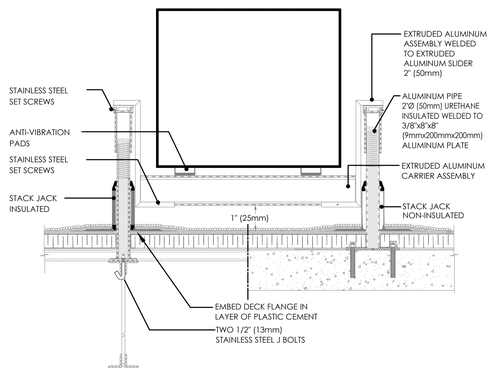

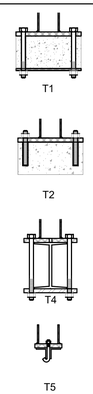

FASTENING METHODS

3 / M600 DETAIL OF EQUIPMENT SUPPORT
SCALE: N.T.S.

DOGHOUSE FABRICATION

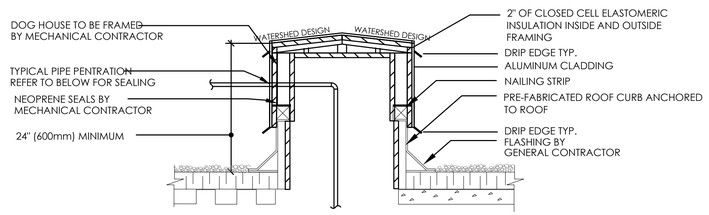

PIPE PENETRATION

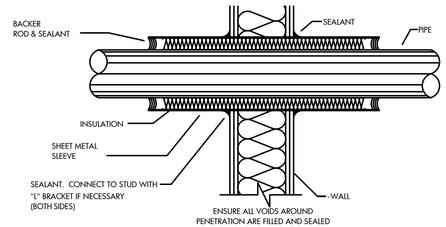

4 / M600 DETAIL OF DOGHOUSE AND PIPING PENETRATIONS
SCALE: N.T.S.

TRUE NORTH

CONSTRUCTION NORTH

MANTECON PARTNERS
STRUCTURAL MECHANICAL ELECTRICAL CIVIL ENGINEERS
15 Foundry Street, Dundas, ON, L9H 2V6
Phone: (905)648-0373 www.manteconpartners.com

SEAL

PRELIMINARY
NOT FOR CONSTRUCTION
MONTH, YEAR
Mantecon Partners

REVIEW ALL DRAWINGS AND VERIFY ALL DIMENSIONS AT THE SITE. DO NOT SCALE THE DRAWINGS. REPORT ALL DISCREPANCIES TO THE ENGINEER BEFORE PROCEEDING WITH ANY CONSTRUCTION OR SHOP FABRICATION. ALL DRAWINGS, SPECIFICATIONS AND RELATED DOCUMENTS ARE THE COPYRIGHT PROPERTY OF MANTECON PARTNERS AND MUST BE RETURNED UPON REQUEST. REPRODUCTION OF DRAWINGS, SPECIFICATIONS AND RELATED DOCUMENTS IN PART OR WHOLE IS FORBIDDEN WITHOUT THE ENGINEER'S WRITTEN PERMISSION.

NO.	ISSUED	DATE	BY
4	ISSUED FOR ADDENDUM M01	2025/11/10	J.C
3	REISSUED FOR TENDER	2025/09/08	J.C
2	ISSUED FOR TENDER	2025/08/06	J.C
1	ISSUED FOR 75% DESIGN	2025/03/21	J.C

CENTENNIAL COLLEGE

CLIENT
CENTENNIAL COLLEGE
65 Carl Hall Rd, Toronto, ON

PROJECT:
CENTENNIAL COLLEGE
DOWNSVIEW
CAMPUS IT ROOM UPGRADES

DRAWING TITLE:
MECHANICAL SCHEDULES AND DETAILS

DRAWN BY: J.C	SCALE: NTS
CHECKED BY: M.V	DRAWING NUMBER: M600
DATE: MAR. 2025	
PROJECT NUMBER: 25-007	

ORIGINAL SHEET – ARCH D

November 10, 2025 – 03:17pm Plotted by: jcrowe

File: J:\Drawings\25-007 – UPS and Cooling Assessment at Downsview Campus – Centennial College\3-Working Documents\M\M600 Mechanical Schedule and Details.dwg

ADDENDUM

E-02

Architect:	N/A	Date:	November 10th, 2025
Project:	UPS and Cooling Assessment at Downsview Campus	Project No.:	25-007

This addendum forms part of the contract documents and amends the original bidding requirements, drawings and specifications noted below.

1. **Electrical**

1.1 Drawings:

.1 Refer to Drawing E000

- Clarification: Added sheet E002 to drawing list.

.2 Refer to Drawing E002

- Added "(SUPPLIED BY OWNER)" to UPS specification sections no longer in the electrical contractor's scope. The owner will be pre-purchasing the UPS and as such will be responsible for providing submittals/shop drawings to the consultants and contractor following consultant review. The contractor will still be responsible for providing closeout submittals. Additionally, alternate UPS manufacturers were removed from specification as the owner is moving forward with purchasing the APC Symmetra PX.

.3 Refer to Drawing E101

- Updated drawing notes to reflect that the electrical contractor will no longer be responsible for purchasing the UPS. The electrical contractor will coordinate with the manufacturer to deliver and install the proposed UPS on site.

END OF ADDENDUM E-02

ELECTRICAL DRAWING LIST

E000	GENERAL NOTES
E001	ELECTRICAL SPECIFICATIONS
E002	UPS SPECIFICATIONS
E100	ELECTRICAL ROOM PROPOSED POWER PLAN
E101	IT ROOM PROPOSED POWER PLAN
E102	ROOF PROPOSED POWER PLAN
E200	DETAILS
ED00	IT ROOM DEMOLITION POWER PLAN

GENERAL NOTES

1. DO NOT SCALE DRAWINGS FOR INSTALLATION PURPOSES. OBTAIN ALL DIMENSIONS FROM THE MANUFACTURER'S SHOP DRAWINGS, AND ON SITE INSPECTIONS.
2. PRIOR TO INSTALLATION OF BOXES IN WALLS, VERIFY THAT NO INTERFERENCES EXIST.
3. MECHANICAL AND ELECTRICAL TRADES SHALL WORK IN CONJUNCTION WITH EACH OTHER SO AS TO AVOID INTERFERENCES BETWEEN PIPING, DUCTWORK, CONDUIT, LIGHTING FIXTURES, ETC.
4. REVIEW MECHANICAL DRAWINGS AND PROVIDE ON SITE INSPECTIONS TO DETERMINE FULL EXTENT OF PROJECT PRIOR TO SUBMITTING BID.
5. ALL WORK SHALL BE PERFORMED IN ACCORDANCE WITH THE ONTARIO BUILDING CODE (OBC), ONTARIO ELECTRICAL SAFETY CODE (OESC) AND THE LOCAL AUTHORITIES REQUIREMENTS.
6. THE ELECTRICAL CONTRACTOR SHALL COORDINATE THE INSTALLATION WITH THE WORK OF OTHER TRADES, PROVIDE HORIZONTAL AND/OR VERTICAL OFFSETS AS REQUIRED TO SUIT THIS COORDINATION.
7. REFER TO THE ARCHITECTURAL DRAWINGS FOR ALL WIRING DEVICE FINAL HEIGHT AND LOCATION.
8. ALL WIRING SHALL BE A MINIMUM #12 AWG IN CONDUIT SUITABLE FOR THE APPLICATION.
9. AC90 (BX) SHALL ONLY BE ALLOWED FOR SHORT RUNS OF LESS THAN 5 FEET IN LENGTH, UNLESS OTHERWISE NOTED.
10. ALL MATERIALS SHALL BEAR A CSA (CANADIAN STANDARDS ASSOCIATION LABEL.
11. ALL INTERIOR LIGHT SWITCHES, RECEPTACLES, AND DATA OUTLETS, INCLUDING CONDUITS SHALL BE "CONCEALED" WITIN THE WALL STRUCTURE.
12. ELECTRICAL SWITCHES, OUTLETS, PUSH-BUTTONS ETC, SHALL COMPLY WITH ACCESSIBILITY FOR ONTARIANS WITH DISABILITES ACT (AODA) FOR MOUNTING HEIGHTS AND LOCATION WHERE APPLICABLE.
13. EXIT SIGNS SHALL BE GREEN, EDGE-LIT, "RUNNING-MAN" PICTOGRAM C/W LED LIGHT SOURCE, ALUMINUM HOUSING, AND UNIVERSAL MOUNTING. WHERE HIGH CEILING EXIST PROVIDE A PENDANT MOUNT TYPE SUSPENDED FROM A THREADED ROD OR EMT CONDUIT AT THE HEIGHT SPECIFIED.
14. BATTERY PACKS SHALL C/W 20% SPARE CAPACITY,12VOLT, ALUMINUM HOUSING C/W TWO (2) 4-WATT, LED, MR-16, DIE CAST HEADS AND WHITE FINISH. PROVIDE MATCHING REMOTE HEADS.
15. ALL UNIVERSAL WASHROOM HARDWARE DEVICES TO BE PROVIDED BY THE ELECTRICAL CONTRACTOR C/W WIRING AND CONDUIT FOR A COMPLETE INSTALLATION. UNLESS OTHERWISE NOTED.
16. ALL SECURITY DOOR ACCESS HARDWARE DEVICES SHALL BE SUPPLIED "BY OTHERS". THE ELECTRICAL CONTRACTOR SHALL PROVIDE ALL WIRING AND CONDUIT ROUGH-IN FOR A COMPLETE INSTALLATION, UNLESS OTHERWISE NOTED.
17. ALL COMMUNICATION CABLING TO BE PROVIDED BY THE ELECTRICAL CONTRACTOR C/W CONDUIT, OUTLET JACKS, AND FACE PLATES FOR A COMPLETE INSTALLATION, UNLESS OTHERWISE NOTED. MAXIMUM LENGTH OF ETHERNET CABLES SHALL BE 300 FEET.
18. ALL AUDIO/VISUAL DEVICES SHALL BE SUPPLIED "BY OTHERS". THE ELECTRICAL CONTRACTOR SHALL PROVIDE CONDUIT ROUGH-IN ONLY, UNLESS OTHERWISE NOTED.
19. POWER AND CONTROL WIRING FOR MECHANICAL EQUIPMENT ON THE ROOF MUST RISE WITHIN THE CURB UNLESS OTHERWISE NOTED.
20. ALL EXTERIOR OUTLET BOXES TO BE "CONCEALED" AND SHALL C/W A VAPOUR BARRIER CHAMBER TO PREVENT AIR LEAKAGE.
21. THE ELECTRICAL CONTRACTOR SHALL PROVIDE BALANCED PHASING (A,B,C) FOR ALL EQUIPMENT PANEL LOADS. ADJUST BREAKER SCHEDULES AS REQUIRED.
22. PROVIDE FIRE-STOP MATERIAL AS REQUIRED FOR ALL WALL AND FLOOR PENETRATIONS TO MAINTAIN THE SMOKE SEAL AND FIRE RATING. FOR RECESSED JUNCTION BOXES USE HILTI - FIRE BLOK.
23. PROVIDE ALL MATERIALS AND ACCESSORIES REQUIRED FOR A COMPLETE GROUNDING SYSTEM AS REQUIRED BY THE GOVERNING AUTHORITIES. GROUND ALL EQUIPMENT AND DEVICES AS REQUIRED AND IN ACCORDANCE WITH THE OESC.
24. UPON THE COMPLETION OF THE CONTRACT, ISSUE A FORMAL CERTIFICATE INDICATING THE DATE OF COMPLETION OF WORK. REPAIR OR REPLACE ANY DEFECTS WHICH MAY APPEAR IN ANY OF THE WORK WITHIN ONE (1) YEAR.

DEMOLITION NOTES

1. ELECTRICAL SYSTEMS SHOWN ON DEMOLITION PLANS ARE BASED ON INFORMATION OBTAINED FROM ORIGINAL CONSTRUCTION CONTRACT/TENDER DOCUMENTS. THESE DRAWINGS ARE NOT BASED ON ' AS-BUILT RECORD' OR ON EXHAUSTIVE FIELD MEASUREMENT AND ARE PROVIDED TO ASSIST THE CONTRACTOR IN DETERMINING THE EXTENT OF WORK REQUIRED. THE CONTRACTOR SHALL MAKE ALLOWANCE IN THEIR TENDER PRICE FOR THE REMOVAL OF ADDITIONAL ABANDONED SERVICES AND THE PROTECTION OF EXISTING SERVICES THAT MUST REMAIN. RECORD THE LOCATION OF ALL EXISTING SERVICES THAT REMAIN ON AS-BUILT RECORD DRAWINGS.

LEGEND - SINGLE LINE DIAGRAM

THIS LEGEND OF SYMBOLS REPRESENTS MANTECON PARTNERS INC. STANDARD LEGEND. ALL SYMBOLS MAY NOT APPEAR ON DRAWINGS.

SYMBOL	DESCRIPTION
	BREAKER (MCCB)
	FUSED DISCONNECT SWITCH
	SWITCH
	FUSE
	DRAWOUT BREAKER
M	METER SOCKET
	TRANSFORMER
	GENERATOR
DMM	DIGITAL MULTIMETER
	AUTOMATIC TRANSFER SWITCH (ATS)
LSI	BREAKER WITH LSI PROTECTION
LSIG	BREAKER WITH LSIG PROTECTION
SPD	SURGE PROTECTION DEVICE
PM	POWER METER

LEGEND - POWER SYSTEM

THIS LEGEND OF SYMBOLS REPRESENTS MANTECON PARTNERS INC. STANDARD LEGEND. ALL SYMBOLS MAY NOT APPEAR ON DRAWINGS.

SYMBOL	DESCRIPTION
	ELECTRICAL PANEL
	DUPLEX RECEPTACLE - CEILING MOUNTED
	DIRECT CONNECTION
	NON FUSED DISCONNECT SWITCH
	FUSED DISCONNECT SWITCH
	NON-FUSED DIRECT CONNECTION
	MOTOR CONNECTION (DISCONNECT BY ELECTRICAL)
	MOTOR CONNECTION (COMBINATION STARTER BY ELECTRICAL)
	MOTOR CONNECTION (UNIT MOUNTED DISCONNECT BY MECHANICAL)

LEGEND - ABBREVIATION

THIS LEGEND OF SYMBOLS REPRESENTS MANTECON PARTNERS INC. STANDARD LEGEND. ALL SYMBOLS MAY NOT APPEAR ON DRAWINGS.

SYMBOL	DESCRIPTION
R	REMOVE
R/R	REMOVE AND REINSTALL
ER	EXISTING TO BE RELOCATED
EX	EXISTING TO REMAIN
GFI	GROUND FAULT INTERRUPT
NL	NIGHT LIGHT
WP	WEATHER-PROOF
ADO	AUTOMATIC DOOR OPENER
HD	HAND DRYER
D/W	DISHWASHER
F/R	REFRIGERATOR
M/W	MICROWAVE
PTO	PUSH TO OPEN
PTL	PUSH TO LOCK

TRUE NORTH

CONSTRUCTION NORTH

MANTECON PARTNERS
STRUCTURAL MECHANICAL ELECTRICAL CIVIL ENGINEERS

15 Foundry Street, Dundas, ON, L9H 2V6
Phone: (905)648-0373 www.manteconpartners.com

SEAL

PRELIMINARY
NOT FOR CONSTRUCTION
MONTH, YEAR
Mantecon Partners

REVIEW ALL DRAWINGS AND VERIFY ALL DIMENSIONS AT THE SITE. DO NOT SCALE THE DRAWINGS. REPORT ALL DISCREPANCIES TO THE ENGINEER BEFORE PROCEEDING WITH ANY CONSTRUCTION OR SHOP FABRICATION. ALL DRAWINGS, SPECIFICATIONS AND RELATED DOCUMENTS ARE THE COPYRIGHT PROPERTY OF MANTECON PARTNERS AND MUST BE RETURNED UPON REQUEST. REPRODUCTION OF DRAWINGS, SPECIFICATIONS AND RELATED DOCUMENTS IN PART OR WHOLE IS FORBIDDEN WITHOUT THE ENGINEER'S WRITTEN PERMISSION.

NO.	ISSUED	DATE	BY
4	ISSUED FOR ADDENDUM E-02	2025/11/10	P.O
3	REISSUED FOR TENDER	2025/09/08	P.O
2	ISSUED FOR TENDER	2025/08/06	P.O
1	ISSUED FOR 75% DESIGN	2025/03/21	P.O

CENTENNIAL COLLEGE

CLIENT
CENTENNIAL COLLEGE
65 Carl Hall Rd, Toronto, ON

PROJECT:
CENTENNIAL COLLEGE
DOWNSVIEW
CAMPUS IT ROOM UPGRADES

DRAWING TITLE:
GENERAL NOTES

DRAWN BY: P.O	SCALE: NTS
CHECKED BY: N.A	DRAWING NUMBER: E000
DATE: MAR. 2025	
PROJECT NUMBER: 25-007	

File: J:\Drawings\25-007 – UPS and Cooling Assessment at Downsview Campus – Centennial College\3-Working Documents\E\E000 LEAD SHEET.dwg

UPS SPECIFICATIONS

1 GENERAL

1.1 REFERENCES

.1 Abbreviations and Acronyms:

.1 UPS: Uninterruptible Power Supply

.2 PDU: Power Distribution Unit
.3 SBM: Static Bypass Module
.4 SBS: Static Bypass Switch
.5 MBS: Maintenance Bypass Switch
.6 MBP: Maintenance Bypass Panel
.7 MBC: Maintenance Bypass Cabinet
.8 THD: Total Harmonic Distortion
.9 SCR: Silicon Controlled Rectifier

.2 Reference Codes and Standards: Versions of the following standards current as of the date of issue of the project apply to the Work of this Section. Where regulatory requirements use older version of a standard, comply with the version year adopted by the Authority Having Jurisdiction.

.1 Ontario Building Code

.2 Ontario Electric Safety Code

.3 Institute of Electrical and Electronics Engineers, Inc. (IEEE):

.1 ANSI/IEEE 519, "Guide for Harmonic Control and Reactive Compensation of Static Power Converters" (copyrighted by IEEE, ANSI approved).

.4 International Organization for Standardization (ISO):

.1 ISO 9001, "Quality Management Systems _ Requirements."

.2 ISO 14001, "Environmental Management Systems _ Requirements with Guidance for Use."

.5 Underwriters Laboratories, Inc. (UL):

.1 UL 1778 second Edition, "Standard for Uninterruptible Power Supply Equipment" (copyrighted by UL, ANSI approved).

.2 UL 60950-1, "Standard for Information Technology Equipment."

.6 International Electrotechnical Commission (IEC)

.1 IEC 61000-4-2, "Electromagnetic Compatibility - Testing and Measurement Techniques; Electrostatic Discharge Immunity Test.

.2 IEC 61000-4-3, "Electromagnetic Compatibility - Testing and Measurement Techniques; Radiated, Radio Frequency, Electromagnetic Field Immunity Test."

.3 IEC 61000-4-4, "Electromagnetic Compatibility - Testing and Measurement Techniques; Electrical Fast Transient/Burst Immunity Test."

.4 IEC 61000-4-5, "Electromagnetic Compatibility - Testing and Measurement Techniques; Surge Immunity Test."

.5 IEC 62040-2, "Uninterruptible Power Systems - Electromagnetic Compatibility (EMC) Requirements,"

.6 IEC 62040-3, "Uninterruptible Power Systems - Method of Specifying the Performance and Test Requirements."

.7 CSA:

.1 C22.2 no. 107.1-M95, "General Use Power Supplies."

.2 60950-1, "Information Technology Equipment - Safety - Part 1: General Requirements."

.8 EMC:

.1 FCC part 15 Class A.

1.2 SUMMARY

.1 Provide design and engineering, labor, material, equipment, related services, and supervision required, including, but not limited to, manufacturing, fabrication, erection, and installation for a static UPS as required for the complete performance of the work and as shown on the Drawings and as herein specified.

.2 The work specified in this Section includes, but shall not be limited to, a continuous duty, three_phase, solid state, on_line double conversion static UPS.

.1 The UPS shall utilize a rack_mounted N+1 redundant, scalable array architecture. The UPS shall be ENERGY STAR qualified. The system power train shall be comprised of 10 kVA/10 kW power modules and shall be capable of being configured for N+X redundant operation at the rated system load. UPS shall facilitate the replacement of swappable power modules in less than ten minutes. Each 10 kVA/10 kW power module shall contain a fully rated input rectifier/boost converter hereafter referred to as the input converter, a fully rated output inverter, and battery charging circuit. The system shall also be comprised of a continuous duty bypass static switch module that can be swapped by trained personnel, battery modules that can be swapped by trained personnel, redundant control modules, redundant logic power supplies, and LCD interface/display. All of the above system components shall be housed in standard 600 mm wide by 1070 mm deep by 2000 mm high cabinets.

.2 This Section describes the performance, functionality, and design of the PDU and the battery system.

.3 The UPS and associated equipment shall operate in conjunction with a primary power supply and an output distribution system to provide quality uninterrupted power for mission critical, electronic equipment load.

.4 All programming and miscellaneous components for a fully operational system as described in this Section shall be available as part of the UPS.

1.3 SYSTEM DESCRIPTION

.1 Design Requirements:

.1 The UPS shall be sized for 30 kVA and 30 kW load with N+1 redundancy.

.2 The UPS battery shall be sized for 30 kW at a power factor of 1.0 for 34 minutes.

.3 The UPS unit shall be scalable for future 40 kVA and 40kW maximum load with N+1 redundancy.

.2 System Characteristics:

.1 System Capacity: The system shall be rated for full kW output in the following frame sizes:

.1 40 kVA/kW, can be configured with up to five, 10 kW power modules for 50 kW with no redundancy or 40 kW N+1 redundancy.

.2 Input:

.1 AC Input Nominal Voltage: 208 volts three-phase, 4 wires, 60 hertz.

.2 AC Input Voltage Window: ±15 percent of nominal (while providing nominal charging to the battery system).

.3 Short Circuit Withstand Rating: 30,000 symmetrical amperes.

.4 Maximum Frequency Range: 40 hertz to 70 hertz.

.5 Input Power Factor:

.1 Greater than 0.96 at 50 percent load.

.2 Greater than 0.99 at 100 percent load.

.6 Input Current Distortion With No Additional Filters:

.1 Less than 6 percent at 100 percent load.

.2 Less than 6 percent at 50 percent load.

.7 Soft Start: Shall be linear from 0 percent to 100 percent input current and shall not exhibit inrush. This shall take place over a 15 second time period.

.3 UPS Output:

.1 AC Output Nominal Output: 208 volts, three-phase, 4 wires, 60 hertz.

.2 AC Output Voltage Distortion: Maximum 3 percent at 100 percent linear load.

.3 AC Output Voltage Regulation: ±1 percent for 100 percent linear or non-linear load.

.4 Voltage Transient Response: ±5 percent maximum for 100 percent load step.

.5 Voltage Transient Recovery: Within less than 60 milliseconds.

.6 Output Voltage Harmonic Distortion:

.1 Less than 2 percent THD maximum and 1 percent single harmonic for a 100 percent linear load.

.2 Less than 5 percent THD maximum for a 100 percent non-linear load.

.7 Overload Rating:

.1 Normal Operation:

.1 150 percent for 30 seconds.

.2 Up to 105 percent.

.2 Bypass Operation:

.1 100 percent continuous.

.2 1000 percent for 500 milliseconds.

.8 System AC-AC Efficiency: Greater than 94% from 50% to 100% load in double- conversion mode. ENERGY STAR qualified.

.9 Output Power Factor Rating: The UPS output shall not require derating for purely resistive loads (power factor of 1). The output kW and kVA ratings of the UPS output shall be equal. For loads exhibiting a power factor of 0.9 leading to 0.8 lagging no derating of the UPS shall be required.

UPS SPECIFICATIONS

1.4 SUBMITTALS (SUPPLIED BY OWNER)

.1 Complete sets of shop drawings will be submitted indicating the following:

.1 Product Data:

.1 As bid system bill of materials.

.2 Product catalog sheets or equipment brochures.

.3 Product guide specifications.

.2 Installation information, including, but not limited to, weights and dimensions.

.3 Information about terminal locations for power and control connections.

.4 Drawings for requested optional accessories.

.5 Wiring diagrams detailing power, signal, and control systems, clearly differentiating between manufacturer installed wiring and field installed wiring, and between components provided by the manufacturer and those provided by others.

.6 Submit system single line operation diagram.

.2 For Closeout submittals provide the following:

.1 Installation manual, which shall include, but shall not be limited to, instructions for storage, handling, examination, preparation, installation, and start up of UPS.

.2 Operation and maintenance manual, which shall include, but shall not be limited to, safe and correct operating instructions of the UPS functions.

1.5 QUALITY ASSURANCE

.1 Qualifications:

.1 Manufacturer Qualifications: Manufacturer shall be a firm engaged in the manufacture of solid state UPS of types and sizes required, and whose products have been in satisfactory use in similar service for a minimum of 20 years.

.1 The manufacturer shall be ISO 9001 certified and shall be designed to internationally accepted standards.

.2 Installer Qualifications: Installer shall be a firm that shall have a minimum of five years of successful installation experience with projects utilizing solid state UPS similar in type and scope to that required for this Project.

.2 Regulatory Requirements: Comply with applicable requirements of the laws, codes, ordinances, and regulations of Federal, State, and local authorities having jurisdiction. Obtain necessary approvals from such authorities.

.1 Work shall also be designed in accordance with the following:

.1 UL 1778 4th edition

.2 UL 60950-1

.2 Where applicable, the UPS shall also be designed in accordance with publications from the following organizations and committees:

.1 National Fire Protection Association (NFPA).

.2 National Electrical Manufacturers Association (NEMA).

.3 Occupational Safety and Health Administration (OSHA).

.4 Institute of Electrical and Electronics Engineers, Inc. (IEEE); ANSI/IEEE 519.

.5 ISO 9001

.6 ISO 14001

.7 FCC

.8 ENERGY STAR

.3 All equipment and components must be CSA approved, ULC approved, or approved by Special Inspection from the Electrical Safety Authority.

.4 Pre-Installation Conference: Prior to commencing the installation, meet at the Project site to review the material selections, installation procedures, and coordination with other trades. Pre-installation conference shall include, but shall not be limited to, the Contractor, the Installer, and any trade that requires coordination with the work. Date and time of the pre-installation conference shall be acceptable to the Owner and the Engineer.

1.6 DELIVERY, STORAGE AND HANDLING

.1 Deliver materials to the Project site in supplier's or manufacturer's original wrappings and containers, labeled with supplier's or manufacturer's name, material or product brand name, and lot number, if any.

.2 Store materials in their original, undamaged packages and containers, inside a well-ventilated area protected from weather, moisture, soiling, extreme temperatures, and humidity.

1.7 PROJECT CONDITIONS

.1 Environmental Requirements: Do not install the UPS until space is enclosed and weatherproof, wet work in space is completed and nominally dry, work above ceilings is complete, and ambient temperature and humidity conditions are and will be continuously maintained at values near those indicated for final occupancy.

.1 Environmental:

.1 Storage Ambient Temperature: 5 °F (15 °C) to 104 °F (40 °C).

.2 Operating Temperature Range: 32 to 104 °F (0 to 40 °C).

.3 Operating Ambient Temperature: 77 °F (25 °C).

.4 Relative Humidity: 0% to 95% non condensing.

.2 Altitude: Maximum installation with no derating of the UPS output shall be 10,000 feet (3048 m) above sea level.

.3 Audible Noise as measured 3 feet (914 mm) from surface:

.1 60 dBA at 70% load.

.2 67 dBA at 100% load.

1.8 WARRANTY

.1 Special Warranty: The Contractor shall warrant the work of this Section to be in accordance with the Contract Documents and free from faults and defects in materials and workmanship for period indicated below. This special warranty shall extend the one-year period of limitations contained in the General Conditions. The special warranty shall be countersigned by the Installer and the manufacturer.

.1 The UPS shall be covered by a full parts and labor warranty from the manufacturer for a period of 12 months from date of installation or acceptance by the Owner or 18 months from date of shipment from the manufacturer, whichever occurs first.

.2 Extended Warranty: The Installer shall warrant the equipment of this Section to be in accordance with the Contract Documents and free from faults and defects in materials and workmanship for period indicated below. The extended warranty shall be countersigned by the Installer and the manufacturer.

.1 The UPS shall be covered by a full parts and labor warranty from the manufacturer for a period of an additional 4 years from date of Total Completion of the Contract.

.3 Additional Owner Rights: The warranty shall not deprive the Owner of other rights the Owner may have under other provisions of the Contract Documents and shall be in addition to and run concurrent with other warranties made by the Contractor under requirements of the Contract Documents.

1.9 MAINTENANCE

.1 A complete offering of preventative and full service maintenance contracts for the UPS system and the battery system shall be available from the manufacturer. Contract work shall be performed by factory trained service personnel.

2 PRODUCTS

2.1 MANUFACTURERS

.1 The products of the following manufacturers are acceptable subject to conformance with the requirements of the Drawings, Schedules and Specification:

.1 Acceptable manufacturers are:

.1 Schneider Electric APC

.2 Source one procurement. Orient each type of product in this Section from a single source with resources to provide products of consistent quality in appearance and physical properties without delaying progress of the Work.

.3 Basis of Design: Product specified is "APC Symmetra PX 40 kW" as manufactured by Schneider Electric. Items specified are to establish a standard of quality for design, function, materials, and appearance.

2.2 MODES OF OPERATION

.1 Normal: The Input converter and output inverter shall operate in an on-line manner to continuously regulate power to the critical load. The input and output converters shall be capable of full battery recharge while simultaneously providing regulated power to the load for all line and load conditions within the range of the UPS specifications.

.2 Battery: Upon failure of the AC input source, the critical load shall continue being supplied by the output inverter, which shall derive its power from the battery system. There shall be no interruption in power to the critical load during both transfers to battery operation and retransfers from battery to normal operation.

.3 Recharge: Upon restoration of utility power to the UPS input, the input converter and output inverter shall simultaneously recharge the battery and provide regulated power to the critical load.

.4 Static Bypass: The SBM shall be used to provide controller transfer of critical load from the inverter output to the bypass source. This transfer, along with its retransfer, shall take place with no power interruption to the critical load. In the event of an emergency, this transfer shall be an automatic function.

.5 Maintenance Bypass: The system shall be equipped with an external make before break MBC to electrically isolate the UPS during routine maintenance and service of the UPS. The MBC shall allow for the completely electrical isolation of the UPS.

2.3 INPUT CONVERTER

.1 General: The Input converters of the system shall be housed within the removable power modules, and shall constantly control the power imported from the mains input of the system, to provide the necessary UPS power for precise regulation of the DC bus voltage, battery charging, and main inverter regulated output power.

.2 Input Current Total Harmonic Distortion: The input current THD shall be held to less than 5% at full system load, while providing conditioned power to the critical load bus, and charging the batteries under steady state operating conditions. This shall be true while supporting either a linear or non-linear load. This shall be accomplished without the requirement for additional filters, magnetic devices, or other components.

.3 Soft Start Operation: As a standard feature, the UPS shall contain a user-adjustable soft start, capable of limiting the input current from 0% to 100% of the input over a default 10 second period, when returning to the AC utility source from battery operation. The change in current over the change in time shall take place in a linear manner throughout the entire operation.

.4 Magnetization Inrush Current: The UPS shall exhibit zero inrush current as a standard product. If provided with an optional isolation transformer, inrush should be limited to 11 times the nominal input current of the transformer.

.5 Input Current Limit:

.1 The Input converter shall control and limit the input current draw from utility to 130% of the rated UPS output. During conditions where input current limit is active, the UPS shall be able to support 100% load, charge batteries at 10% of the UPS output rating, and provide voltage regulation with mains deviation ±15%.

.6 Redundancy: The UPS shall be capable of being configured with redundant Input converters, each with semiconductor fusing, and logic-controlled contactors to isolate a failed module from the input bus.

.7 Backfeed Protection: The above mentioned logic controlled contactor shall also provide the backfeed protection required by UL 1778, CSA 22.2, and IEC/EN Standards.

.8 Charging:

.1 The battery charging shall keep the DC bus float voltage of nominal 218 volts, ±1%.

.2 The battery charging circuit shall contain a temperature compensation circuit, which shall regulate the battery charging to optimize battery life.

.3 The battery charging circuit shall remain active when in static bypass and in normal operation.

.4 Maximum charging power: 10% (default) or 20% of output power rating or a maximum charge current of 0.25 CA.

2.4 OUTPUT INVERTER

.1 General: The UPS output inverter shall constantly develop the UPS output voltage waveform by converting the DC bus voltage to AC voltage through a set of semiconductor driven power converters. In both normal operation and battery operation, the output inverters shall create an output voltage independent of the mains input voltage. Input voltage anomalies such as brown outs, spikes, surges, sags, and outages shall not affect the amplitude or sinusoidal nature of the output voltage sine wave of the inverters.

.2 Overload Capability: Steady state overload conditions, of up to 150% of system capacity shall be sustained by the inverter for 30 seconds in normal and battery operation. Should overloads persist past the outlined time limitation, the critical load shall be switched to the automatic static bypass output of the UPS.

.3 Output Contactor: The output inverter shall be provided with an output mechanical contactor to provide physical isolation of the inverter from the critical bus. With this feature a failed inverter shall be isolated from the critical bus.

.4 Battery Protection: The inverter shall be provided with monitoring and control circuits to limit the level of discharge on the battery system.

.5 Redundancy: The UPS shall be capable of being configured with redundant output inverters, each with semiconductor fusing, and logic controlled contactors to remove a failed component from the input, DC, and output critical bus.

2.5 STATIC BYPASS

.1 As part of the UPS, a system SBM shall be provided with no break transfer of the critical load from the inverter output to the static bypass input source during times where maintenance is required, or the inverter cannot support the critical bus. Such times may be due to prolonged or severe overloads, or UPS failure. The UPS and SBS shall constantly monitor the auxiliary contacts of their respective circuit breakers, as well as the bypass source voltage, and inhibit potentially unsuccessful transfers to static bypass from taking place.

.2 The design of the SBS power path shall consist of SCR(s) with a continuous duty rating of 125% of the UPS output rating.

.3 An automatic transfer of load to static bypass shall take place whenever the load on the critical bus exceeds the overload rating of the UPS. Automatic transfers of the critical load from static bypass back to normal operation shall take place when the overload condition is removed from the critical output bus of the system. Automatic transfers of load to static bypass shall also take place if for any reason the UPS cannot support the critical bus.

.4 Manually initiated transfers to and from static bypass shall be initiated through the UPS display interface.

.5 The static bypass shall be capable of handling overloads equal to or less than 125% of the rated system output continuously. For instantaneous overloads caused by inrush current from magnetic devices, or short circuit conditions, the static bypass shall be capable of sustaining overloads of 1000% of system capacity for periods of up to 100 milliseconds.

.6 The SBS shall be of a modular design.

.7 As a requirement of UL 1778, backfeed protection in the static bypass circuit shall also be incorporated in the system design. To achieve backfeed protection, a mechanical contactor in series with the bypass SCR(s) shall be controlled by the UPS/SBS, to open immediately upon sensing a condition where backfeeding of the SBS by any source connected to the critical output bus of the system is occurring. One such condition could be a result of a shorted SCR.

2.6 DISPLAY AND CONTROLS

.1 The UPS shall be controlled by two fully redundant intelligence modules (IM) that can be swapped by trained personnel. These modules shall have separate, optically isolated, communication paths to the power and static switch modules. Logic power for the control modules shall be derived from redundant power supplies, each having a separate AC and DC input and output. The communication of the control modules shall be of controller area network (CAN Bus).

.2 A microprocessor controlled display unit shall be located on a hinged door in front of the system. The display shall consist of an alphanumeric display with backlight, four LEDs for quick status overview, and a keypad consisting of pushbutton switches.

.3 The following metered data shall be available on the alphanumeric display:

.1 Year, month, day, hour, minute, second of occurring events.

.2 Source input voltage.

.3 Output AC voltage.

.4 Output AC current.

.5 Input frequency.

.6 Battery voltage.

.4 The display unit shall allow trained personnel to display a time and date stamped log.

.5 The display unit shall allow the Owner to display a log of active alarms. The following minimum set of alarm conditions shall be available:

.1 Input frequency outside configured range.

.2 AC adequate for UPS but not for bypass.

.3 Low/no AC input, startup on battery.

.4 Intelligence module inserted.

.5 Intelligence module removed.

.6 Redundant intelligence module inserted.

.7 Redundant intelligence module removed.

.8 Number of batteries changed since last on.

.9 Number of power modules changed since last on.

.10 Number of batteries increased.

.11 Number of batteries decreased.

.12 Number of power modules increased.

.13 Number of power modules decreased.

.14 Number of external battery cabinets increased.

.15 Number of external battery cabinets decreased.

.16 Redundancy restored.

.17 Need battery replacement.

.18 The redundant intelligence module is in control.

.19 UPS fault.

.20 On battery.

.21 Shutdown or unable to transfer to battery due to overload.

.22 Load shutdown from bypass, input frequency, volts outside limits.

.23 Fault, internal temperature exceeded system normal limits.

.24 Input circuit breaker open.

.25 System level fan failed.

.26 Bad battery module.

.27 Bad power module.

.28 Intelligence module installed and failed.

.29 Redundant intelligence module installed and failed.

.30 Redundancy lost.

.31 Redundancy below alarm threshold.

.32 Runtime below alarm threshold.

.33 Load above alarm threshold.
.34 Load no longer above alarm threshold.
.35 Minimum runtime restored.
.36 Bypass not in range (either frequency or voltage).
.37 Backfeed contactor stuck in OFF position.
.38 Backfeed contactor stuck in ON position.
.39 UPS in bypass due to internal fault.
.40 UPS in bypass due to overload.
.41 System in forced bypass.
.42 Fault, bypass relay malfunction.
.43 High DC warning.
.44 High DC shutdown.
.45 Low battery shutdown.
.46 Low battery warning.

.6 The following controls or programming functions shall be accomplished by the use of the display unit. Pushbutton membrane switches shall facilitate these operations:

.1 Silence audible alarm.

.2 Display or set the date and time.
.3 Transfer critical load to and from static bypass.
.4 Test battery condition on demand.
.5 Set intervals for automatic battery tests.
.6 Adjust set points for different alarms.
.7 Program the parameters for remote shutdown.
.8 Enable or disable the automatic restart feature (field service engineer only).

.7 The following potential free (dry) contacts shall be available on an optional relay interface board:

.1 Normal operation.

.2 Battery operation.
.3 Bypass operation.
.4 Common fault.
.5 Low battery.
.6 UPS off.

.8 A communication interface board shall provide the following communication port:

.1 RS232 serial port: Enables local access to the UPS for management and monitoring, and provides UPS data and simple signaling support.

2.7 BATTERY

.1 The UPS batteries shall be of a modular construction and shall be protected by a fuse. Trained personnel shall be capable of swapping the battery modules without the requirement to transfer to bypass. Each battery module shall be monitored for voltage and temperature for use by the UPS battery diagnostic and temperature compensated charger circuitry.

.2 The battery jars housed within each removable battery module shall be of the valve regulated lead acid (VRLA) type.

.3 The UPS shall incorporate a battery management system to continuously monitor the health of each removable battery module. This system shall notify the user in the event a failed or weak battery module is found.

2.8 ACCESSORIES

.1 Battery Disconnect Breaker: Each UPS system shall have a 250 volt DC rated, thermal magnetic trip molded case circuit breaker. Each circuit breaker shall be equipped shunt trip mechanisms and 1A/1B auxiliary contacts. The circuit breakers shall be located within the UPS cabinet or as part of a line-up-and-match type battery cabinet.

.2 Maintenance System Bypass:

.1 The maintenance system bypass panel shall provide power to the critical load from the bypass source, during times where maintenance or service of the UPS is required. The maintenance system bypass shall provide a mechanical means of complete isolation of the UPS from the critical output distribution. The maintenance system bypass panel shall be constructed in a standard 29.53 inch wide x 37.8 inch high x 9.25 inch deep, wall-mount style cabinet.

.2 As a minimum, the maintenance system bypass shall contain the following features and accessories:

.1 Appropriately rated switches to fully isolate the UPS during times where maintenance is required. As a part of this design there shall be a UPS input switch designated as Q1, a UPS output switch designated as Q2, and a wrap-around maintenance bypass switch designated as Q3. Minimum 1A/1B auxiliary contacts for the purpose of relaying status information of each switch actuator to the UPS and maintenance system bypass shall be provided, along with a means of locking out the switches to inhibit operation of the bypass transfer pair. The maintenance system bypass shall be available for a 208 volt input.

.2 For purposes of providing local annunciation of status and alarm messages, the maintenance system bypass shall have an alphanumeric display with pushbutton switches, allowing retrieval of active alarms, system level programming, and event history of the maintenance system bypass. For purposes of simplicity and ease of use, the maintenance system bypass display shall be identical in nature to that of the Symmetra PX 40 kW UPS.

.3 The maintenance system bypass shall also have a full length hinged front door, with locking mechanism; to allow access to the three maintenance bypass switches.

.4 The maintenance system bypass shall bear a full mimic diagram outside the hinged front door. Also associated with the mimic panel shall be indicating lights, capable of depicting proper operation of maintenance bypass circuit breaker and UPS output switch.

.3 Modular Battery Solutions: For purposes of providing extended UPS back-up power, modular battery cabinets shall be available. For ease of maintenance the modular battery cabinet shall house draw-out battery cartridges. These cartridges shall conform to OSHA lifting requirements for one person to replace battery cartridges without lifting tools or additional mechanisms. Battery cartridges shall interlock in place within the battery cabinet to ensure proper contact. When withdrawing a battery cartridge, a catch shall stop the battery cartridge from inadvertently being withdrawn in an unsafe manner. The modular battery solution shall be housed in a standard, 24 inch (610 mm) wide, 36 inch (914 mm) deep, 42U high equipment racks. Up to four modular battery cabinets may be added for increased battery runtime.

.4 Floor Anchor Brackets: Floor anchor brackets shall be available to solidly connect UPS, and battery cabinet to minimize unintended moving of the equipment.

.5 StruxureWare Data Center Expert: A centralized infrastructure management platform hereafter referred to as Data Center Expert shall be available for purposes of complete system monitoring and management of all components outlined in this specification used as a single solution for small IT or part of the StruxureWare software stack providing data to systems such as Data Center Operation.

.1 Monitoring - Data Center Expert shall be capable of monitoring a PDU through a network of Cat 5 cable and a switch supplied by the user. This switch shall relay information to Data Center Expert, which in turn shall allow access to this information via the user's public network via a single IP address.

.2 Monitored Values: Data Center Expert shall be capable of monitoring alarms, general status parameters, voltage and current of the PDU.

.3 Thresholds: For individualized customer needs, Data Center Expert shall allow for user configurable thresholds for alarm notification. With this feature, Data Center Expert can notify clients of reaching thresholds for PDU capacity, or branch circuit breaker capacity. Other custom programmable alarm points for non-Schneider Electric products shall also be available via dry contact input signal.

.4 Public Network Monitoring: Data Center Expert shall also be capable of monitoring other Schneider Electric devices that are connected to the client's public network.

2.9 SOFTWARE AND CONNECTIVITY

.1 Network Adaptor: The Network Management Card shall allow one or more network management systems (NMS) to monitor and manage the UPS in TCP/IP network environments. The management information base (MIB) shall be provided in DOS and UNIX "tar" formats. The SNMP interface adaptor shall be connected to the UPS via Ethernet Port.

.2 Unattended Shutdown:

.1 The UPS, in conjunction with a network interface card, shall be capable of gracefully shutting down one or more operating systems.

.3 Remote UPS Monitoring: The following methods of remote UPS monitoring shall be available:

.1 Web Monitoring: Remote monitoring shall be available via a web browser such as Internet Explorer.

.2 Simple Network Management Protocol (SNMP): Remote UPS monitoring shall be possible through a standard MIB II compliant platform.

.4 Software Compatibility: The UPS manufacturer shall have available software to support graceful shutdown and remote monitoring with PowerChute Network Shutdown (PCNS) for the following operating system families:

.5 Microsoft Windows

.1 MAC OS X

.2 Hyper-V

.3 VMware

.4 Linux

.5 Unix

2.10 SOURCE QUALITY CONTROL

.1 Equipment shall be provided with all auxiliary components and mounting hardware required for installation in the building as intended.

3 EXECUTION

3.1 EXAMINATION

.1 Verification of Conditions: Examine areas and conditions under which the work is to be installed, and notify the Contractor in writing, with a copy to the Owner and the Architect/Engineer, of any conditions detrimental to the proper and timely completion of the work. Do not proceed with the work until unsatisfactory conditions have been corrected.

.1 Beginning of the work shall indicate acceptance of the areas and conditions as satisfactory by the Installer.

3.2 INSTALLATION

.1 Preparation and installation shall be in accordance with reviewed product data, final shop drawings, manufacturer's written recommendations, and as indicated on the Drawings.

.2 Factory assisted UPS start up will be required. Factory trained service personnel shall perform the following inspections, test procedures, and on site training:

.1 Visual Inspection:

.1 Inspect equipment for signs of damage.

.2 Verify installation per manufacturer's instructions.

.3 Inspect cabinets for foreign objects.

.4 Inspect battery units.

.5 Inspect power modules.

.2 Mechanical Inspection:

.1 Check UPS and external MBC internal control wiring connections.

.2 Check UPS and external MBC internal power wiring connections.

.3 Check UPS and external MBC terminal screws, nuts, and/or spade lugs for tightness.

.3 Electrical Inspection:

.1 Verify correct input and bypass voltage.

.2 Verify correct phase rotation of mains connections.

.3 Verify correct UPS control wiring and terminations.

.4 Verify voltage of battery modules.

.5 Verify neutral and ground conductors are properly landed.

.6 Inspect external MBS for proper terminations and phasing.

.4 Site Testing:

.1 Ensure proper system start up.

.2 Verify proper firmware control functions.

.3 Verify proper firmware bypass operation.

.4 Verify proper MBS operation.

.5 Verify system set points.

.6 Verify proper inverter operation and regulation circuits.

.7 Simulate utility power failure.

.8 Verify proper charger operation.

.9 Document, sign, and date test results.

.5 On Site Operational Training:

.1 During the factory assisted start up, operational training for site personnel shall include, but shall not be limited to, key pad operation, LED indicators, start up and shutdown procedures, maintenance bypass and AC disconnect operation, and alarm information.

.3 FIELD QUALITY CONTROL

.1 Manufacturer Field Service:

.1 Worldwide Service: The UPS manufacturer shall have a worldwide service organization available, consisting of factory trained field service personnel to perform start up, preventative maintenance, and service of the UPS system and power equipment. The service organization shall offer 24 hours a day, 7 days a week, 365 days a year service support.

.2 Replacement Parts: Parts shall be available through the worldwide service organization 24 hours a day, 7 days a week, 365 days a year. The worldwide service organization shall be capable of shipping parts within four working hours or on the next available flight, so that the parts may be delivered to the Owner within 24 hours.

.4 DEMONSTRATION

.1 General: Provide the services of a factory authorized service representative of the manufacturer to provide start up service and to demonstrate and train the Owner's personnel.

.1 Test and adjust controls and safeties. Replace damaged or malfunctioning controls and equipment.

.2 Train the Owner's maintenance personnel on procedures and schedules related to start up and shutdown, troubleshooting, servicing, and preventive maintenance.

.3 Review data in operation and maintenance manuals with the Owner's personnel.

.4 Schedule training with the Owner, through the Architect/Engineer, with at least seven day's advanced notice.

.5 PROTECTION

.1 Provide final protection and maintain conditions in a manner acceptable to the Installer that shall ensure that the solid state UPS shall be without damage at time of Substantial Completion.

END OF SECTION

TRUE NORTH

CONSTRUCTION NORTH

MANTECON PARTNERS
STRUCTURAL MECHANICAL ELECTRICAL CIVIL ENGINEERS

15 Foundry Street, Dundas, ON, L9H 2V6
Phone: (905)648-0373 www.manteconpartners.com

SEAL

PRELIMINARY
NOT FOR CONSTRUCTION
MONTH, YEAR
Mantecon Partners

REVIEW ALL DRAWINGS AND VERIFY ALL DIMENSIONS AT THE SITE. DO NOT SCALE THE DRAWINGS. REPORT ALL DISCREPANCIES TO THE ENGINEER BEFORE PROCEEDING WITH ANY CONSTRUCTION OR SHOP FABRICATION. ALL DRAWINGS, SPECIFICATIONS AND RELATED DOCUMENTS ARE THE COPYRIGHT PROPERTY OF MANTECON PARTNERS AND MUST BE RETURNED UPON REQUEST. REPRODUCTION OF DRAWINGS, SPECIFICATIONS AND RELATED DOCUMENTS IN PART OR WHOLE IS FORBIDDEN WITHOUT THE ENGINEER'S WRITTEN PERMISSION.

NO.	ISSUED	DATE	BY
4	ISSUED FOR ADDENDUM E-02	2025/11/10	P.O
3	REISSUED FOR TENDER	2025/09/08	P.O
2	ISSUED FOR TENDER	2025/08/06	P.O
1	ISSUED FOR 75% DESIGN	2025/03/21	P.O

CENTENNIAL COLLEGE

CLIENT
CENTENNIAL COLLEGE
65 Carl Hall Rd, Toronto, ON

PROJECT:
CENTENNIAL COLLEGE
DOWNSVIEW
CAMPUS IT ROOM UPGRADES

DRAWING TITLE:
UPS SPECIFICATIONS

DRAWN BY: P.O
SCALE: NTS
CHECKED BY: N.A
DATE: MAR. 2025
DRAWING NUMBER: E002
PROJECT NUMBER: 25-007

DRAWING NOTES

1. OWNER TO PRE-PURCHASE NEW 30 KVA UPS SCALABLE TO 40KVA (SY40K40F). ELECTRICAL CONTRACTOR TO COORDINATE DELIVERY AND INSTALLATION WITH MANUFACTURER. PROVIDE WIRING/CONDUIT FROM MAINTENANCE BYPASS PANEL TO PROPOSED UPS. REFER TO MANUFACTURERS INSTALLATION INSTRUCTIONS.
2. OWNER TO PRE-PURCHASE NEW MAINTENANCE BYPASS PANEL (SBP40KFC1M1). ELECTRICAL CONTRACTOR TO COORDINATE DELIVERY AND INSTALLATION WITH MANUFACTURER. PROVIDE WIRING/CONDUIT AS REQUIRED TO FEED PROPOSED MAINTENANCE BYPASS FROM EXISTING PANEL DP-2F1.
3. PROVIDE NEW 3-PHASE 200A PANEL FED FROM PROPOSED UPS. PROVIDE CIRCUIT BREAKERS AND WIRING/ CONDUIT AS REQUIRED TO RE-FEED ALL EXISTING IT EQUIPMENT. ONCE EXISTING IT EQUIPMENT HAS BEEN FED FROM PROPOSED PANEL 2P1. REMOVE EXISTING UPS AND RETURN TO OWNER.
4. INDICATED EQUIPMENT SHALL BE FED FROM EXISTING PANEL PP-2AE2. REFER TO DRAWING E300 FOR PANEL SCHEDULES.

GENERAL NOTES

1. ALL SHUTDOWNS SHALL BE KEPT TO A MINIMUM. COORDINATE SHUTDOWNS WITH OWNER.

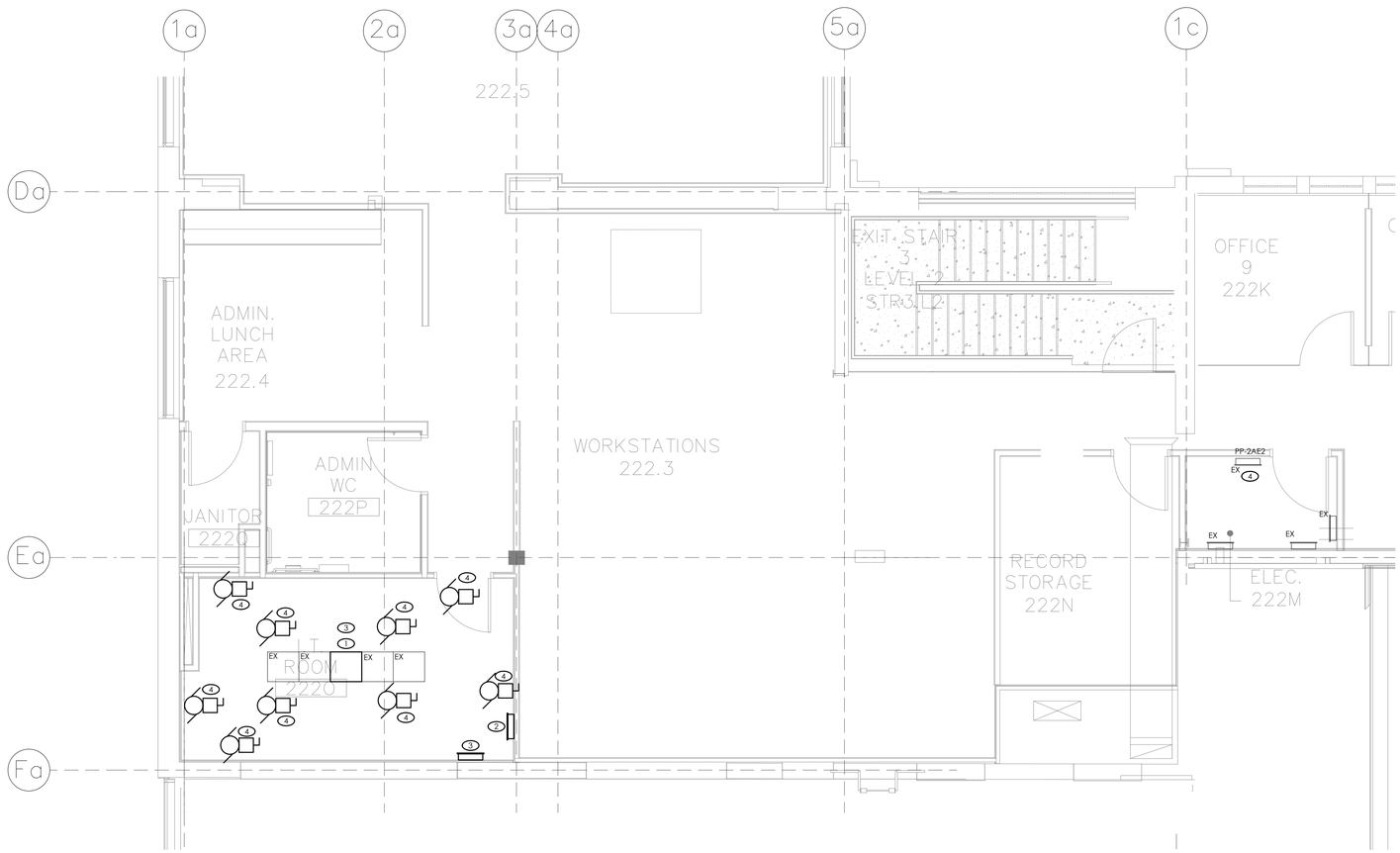

1 E101 IT ROOM PROPOSED POWER PLAN
SCALE: 1:50

ORIGINAL SHEET – ARCH D

TRUE NORTH

CONSTRUCTION NORTH

MANTECON PARTNERS
STRUCTURAL MECHANICAL ELECTRICAL CIVIL ENGINEERS

15 Foundry Street, Dundas, ON, L9H 2V6
Phone: (905)648-0373 www.manteconpartners.com

SEAL

PRELIMINARY
NOT FOR CONSTRUCTION
MONTH, YEAR
Mantecon Partners

REVIEW ALL DRAWINGS AND VERIFY ALL DIMENSIONS AT THE SITE. DO NOT SCALE THE DRAWINGS. REPORT ALL DISCREPANCIES TO THE ENGINEER BEFORE PROCEEDING WITH ANY CONSTRUCTION OR SHOP FABRICATION. ALL DRAWINGS, SPECIFICATIONS AND RELATED DOCUMENTS ARE THE COPYRIGHT PROPERTY OF MANTECON PARTNERS AND MUST BE RETURNED UPON REQUEST. REPRODUCTION OF DRAWINGS, SPECIFICATIONS AND RELATED DOCUMENTS IN PART OR WHOLE IS FORBIDDEN WITHOUT THE ENGINEER'S WRITTEN PERMISSION.

NO.	ISSUED	DATE	BY
4	ISSUED FOR ADDENDUM E-01	2025/11/10	P.O
3	REISSUED FOR TENDER	2025/09/08	P.O
2	ISSUED FOR TENDER	2025/08/06	P.O
1	ISSUED FOR 75% DESIGN	2025/03/21	P.O

CENTENNIAL COLLEGE

CLIENT
CENTENNIAL COLLEGE
65 Carl Hall Rd, Toronto, ON

PROJECT:
CENTENNIAL COLLEGE
DOWNSVIEW
CAMPUS IT ROOM UPGRADES

DRAWING TITLE:
IT ROOM PROPOSED POWER PLAN

DRAWN BY: P.O	SCALE: 1:50
CHECKED BY: N.A	DRAWING NUMBER: E101
DATE: MAR. 2025	
PROJECT NUMBER: 25-007	

File: J:\Drawings\25-007 – UPS and Cooling Assessment at Downsview Campus – Centennial College\3-Working Documents\E\E201 – IT ROOM 2220 & ELEC ROOM 222 – PROPOSED.dwg

November 10, 2025 – 04:16pm Plotted by: popie