THE REGIONAL MUNICIPALITY OF DURHAM

WORKS DEPARTMENT
EXPAND GARAGE
SCUGOG DEPOT
TOWNSHIP OF SCUGOG
CONTRACT NO. T-1038-2019

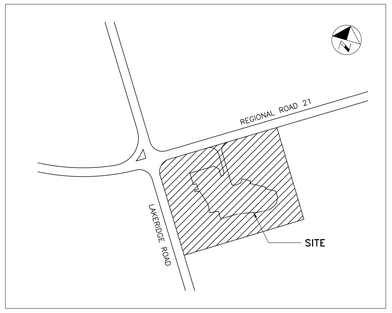

KEY PLAN
N.T.S.

IBI GROUP
100-175 Galaxy Boulevard
Toronto ON M9W 0C9 Canada
tel 416 679 1930 fax 416 675 4620
ibigroup.com

PROJECT NO. 24RX12.0113

D R A W I N G L I S T

GENERAL

02-G00-00-00	COVER PAGE, DRAWING LIST

CIVIL

02-C00-00-01	LEGEND AND NOTES
02-C00-00-02	TOPOGRAPHIC SURVEY
02-C10-00-01	SITE GRADING PLAN
02-C20-00-01	SITE SERVICING PLAN

ARCHITECTURAL

02-A00-00-01	CODE DATA MATRIX, FIRE SEPARATION PLAN
02-A10-00-00	SITE PLAN
02-A21-01-01	FIRST FLOOR PLAN
02-A23-00-01	ROOF PLAN
02-A30-00-01	BUILDING ELEVATIONS
02-A31-00-01	BUILDING CROSS SECTIONS
02-A40-00-01	WALL SECTIONS
02-A41-00-01	SECTION DETAILS
02-A42-00-01	PLAN DETAILS
02-A42-00-02	PLAN DETAILS
02-A43-00-01	ROOF DETAILS
02-A45-00-01	DOOR DETAILS
02-A46-00-01	MISCELLANEOUS DETAILS
02-A83-00-01	LADDER DETAILS
02-A90-00-01	ROOM AND DOOR SCHEDULE

STRUCTURAL

02-S00-00-01	GENERAL NOTES
02-S00-00-02	ROOF SNOW AND WIND LOAD DIAGRAMS
02-S00-00-03	TYPICAL DETAILS
02-S00-00-04	TYPICAL DETAILS
02-S10-00-01	FOUNDATION PLAN
02-S11-00-01	SLAB ON GRADE PLAN
02-S20-00-01	ROOF FRAMING PLAN
02-S30-00-01	ELEVATIONS
02-S40-00-01	SECTIONS AND DETAILS FOOTING, PIER AND COLUMN SCHEDULES
02-S40-00-02	SECTIONS AND DETAILS
02-S50-00-01	SECTIONS AND DETAILS
02-S50-00-02	SECTIONS AND DETAILS

MECHANICAL

02-M01-00-01	LEGEND AND SYMBOLS
02-M10-00-01	EQUIPMENT SCHEDULES
02-M21-00-01	U/G DRAINAGE FLOOR PLAN
02-M21-01-01	A/G PLUMBING & STORM DRAINAGE FLOOR PLAN
02-M26-00-01	PLUMBING & DRAINAGE DETAILS
02-M46-00-01	FIRE PROTECTION DETAILS
02-M51-01-01	HVAC & FIRE PROTECTION FLOOR PLAN
02-M51-03-01	HVAC ROOF PLAN
02-M56-00-01	HVAC DETAILS
02-M63-00-01	HVAC SECTIONS
02-M74-00-01	CONTROL SCHEMATICS
02-M74-01-01	CONTROL SCHEMATICS & BMS ARCHITECTURE
02-M80-00-01	DEMOLITION FLOOR PLAN

ELECTRICAL

02-E00-00-01	ELECTRICAL LAYOUT LEGEND
02-E00-00-02	ELECTRICAL SINGLE LINE SYMBOLS
02-E01-00-01	ELECTRICAL SITE PLAN
02-E09-00-01	ELECTRICAL SITE DETAILS
02-E09-00-02	ELECTRICAL SITE DETAILS
02-E10-00-01	ELECTRICAL SINGLE LINE DIAGRAM
02-E11-01-01	MAIN BUILDING POWER LAYOUT
02-E19-01-01	PANEL SCHEDULES
02-E21-01-01	MAIN BUILDING LIGHTING LAYOUT
02-E29-00-01	LIGHTING DETAILS, LV CONTROL DIAGRAM
02-E29-00-02	LUMINAIRE SCHEDULE, LIGHTING CONTROL SEQUENCE
02-E30-00-01	AUXILIARY SYSTEM RISER DIAGRAM -1
02-E30-00-02	AUXILIARY SYSTEM RISER DIAGRAM -2
02-E31-01-01	MAIN BUILDING AUXILIARY SYSTEM LAYOUT
02-E39-00-01	TELECOM ROOM LAYOUT AND DETAILS
02-E39-00-02	SECURITY SYSTEM DETAIL
02-E39-00-03	SECURITY SYSTEM DETAIL
02-E61-01-01	MAIN BUILDING GROUNDING & LIGHTNING PROTECTION LAYOUT

PROCESS

02-Q20-01-01	PROCESS FLOW DIAGRAMS
02-Q40-01-01	REPAIR BAYS PROCESS LAYOUT

Firm Name: IBI GROUP
100–175 Galaxy Boulevard
Toronto, ON M9W 0C9
T 416 679 1930 F 416 675 4620

Name of Project: PROPOSED ADDITION
DURHAM REGION SCUGOG DEPOT

Location: 10 REGIONAL RD. 21, R.R.#14,
PORT PERRY, ONTARIO

ONTARIO ASSOCIATION OF ARCHITECTS — ANTHONY VAN VEEN — LICENCE — Mar 18/19

ITEM	2012 Building Code Data Matrix Part 3 or 9	OBC REFERENCE (References are to Division B unless noted [A] for Division A or [C] for Division C)		REMARKS
		■ PART 3	☐ PART 9	
1.	PROJECT (☐ CHANGE OF USE ☐ New ■ Addition ☐ Alteration ☐ PART 11 11.1 to 11.4	1.1.2. [A]	1.1.2 [A] & 9.10.1.3.	
2.	MAJOR OCCUPANCY(S) F2 MEDIUM HAZARD INDUSTRIAL	3.1.2.1.(1)	9.10.2.	
3.	BUILDING AREA (m^2) EXISTING 707.53 New 356.20 Total 1063.73	1.4.1.2 [A]	1.4.1.2 [A]	
4.	GROSS AREA (m^2) EXISTING 897.30 New 356.20 Total 1253.50	1.4.1.2 [A]	1.4.1.2 [A]	
5.	NUMBER OF STOREYS ABOVE GRADE 2 BELOW GRADE 0	1.4.1.2 [A] & 3.2.1.1	1.4.1.2 [A] & 9.10.4	
6.	NUMBER OF STREETS/FIRE FIGHTER ACCESS 1	3.2.2.10. & 3.2.5	9.10.20.	
7.	BUILDING CLASSIFICATION GROUP F, DIVISION 2, UP TO 4 STORIES – OBC 3.2.2.70	3.2.2.20.–.83	9.10.2.	
8.	SPRINKLER SYSTEM PROPOSED ☐ ENTIRE BUILDING ☐ SELECTED COMPARTMENTS ☐ SELECTED FLOOR AREA ☐ BASEMENT ☐ IN LIEU OF ROOF RATING ■ NOT REQUIRED	3.2.2.20.–.83 3.2.1.5. 3.2.2.17. INDEX	9.10.8.2. INDEX	
9.	STANDPIPE REQUIRED ☐ YES ■ NO STANDPIPE PROVIDED ☐ YES ■ NO	3.2.9	N/A	
10.	FIRE ALARM REQUIRED ☐ YES ■ NO FIRE ALARM PROVIDED ☐ YES ■ NO	3.2.4	9.10.18	
11.	WATER SERVICE/SUPPLY IS ADEQUATE ■ YES ☐ NO	3.2.5.7	N/A	SEE NOTE 1
12.	HIGH BUILDING ☐ YES ■ NO	3.2.6	N/A	
13.	CONSTRUCTION RESTRICTIONS PERMITTED ☐ COMBUSTIBLE ☐ NON COMBUSTIBLE REQUIRED ■ BOTH ACTUAL CONSTRUCTION ☐ COMBUSTIBLE ■ NON COMBUSTIBLE ☐ BOTH	3.2.2.20.–.83	9.10.6	
14.	IMPORTANCE CATEGORY ☐ LOW ■ NORM ☐ HIGH ☐ POST–DISASTER	4.1.2.1(3) 5.2.2.1.(2)	9.4.1.1., 4.1.2.1.(3) 5.2.2.1.(2)	
	SITE CLASS (A,B,C,D,E FROM GEOTECHNICAL REPORT) D	4.1.8.4.	4.1.8.4.	
	EARTHQUAKE IMPORTANCE FACTOR (I_E) 1.0	T.4.1.8.5.	T.4.1.8.5.	
	ACCELERATION BASED COEFFICIENT (Fa) 1.3	T.4.1.8.4.B	T.4.1.8.4.B	
	5% SPECIAL RESPONSE ACCELERATION Sa (0.2) 0.17	4.1.8.4.(1) & SB–1 T.1.2.	4.1.8.4.(1) & SB–1 T.1.2.	
	SEISMIC HAZARD INDEX I_E Fa Sa (0.2)= 0.221	T.4.1.8.4.B	T.4.1.8.4.B	
	DESIGN FOR SEISMIC REQUIRED FOR CATEGORIES 6 TO 21. TABLE 4.1.8.18. (EQUAL OR ABOVE 0.35?) (YES OR NO) NO	4.1.8.18.(2)	4.1.8.18.(2), 9.20.1.2., 9.31.6.2.(3)	
15.	MEZZANINE (S) AREA m^2 N/A	3.2.1.1(3)–(8)	9.10.4.1	
16.	OCCUPANT LOAD BASED ON ☐ m^2/PERSON ■ DESIGN OF BUILDING BASEMENT: OCCUPANCY ____ LOAD ____ PERSONS 1ST FLOOR: OCCUPANCY ____ LOAD 45 PERSONS 2ND FLOOR: OCCUPANCY ____ LOAD ____ PERSONS 3RD FLOOR: OCCUPANCY ____ LOAD ____ PERSONS (ADDITIONAL FLOOR AREAS CONTINUED ON LAST PAGE)	3.1.17.	9.9.1.3	
17.	BARRIER FREE DESIGN ■ YES ☐ NO (EXPLAIN)	3.8.	9.5.2.	
18.	HAZARDOUS SUBSTANCES ☐ YES ■ NO	3.3.1.2 & 3.3.1.19.	9.10.1.3.(4)	
19.	REQUIRED FIRE RESISTANCE RATING (FRR) HORIZONTAL ASSEMBLIES FRR (HOURS) / LISTED DESIGN NO OR DESCRIPTION (SB–2) FLOORS N/A HOURS ROOF N/A HOURS MEZZANINE N/A HOURS FRR OF SUPPORTING MEMBERS / LISTED DESIGN NO. OR DESCRIPTION (SB–2) FLOORS N/A HOURS ROOF N/A HOURS MEZZANINE N/A HOURS	3.2.2.20 –.83 & 3.2.1.4	9.10.8. 9.10.9.	OBC 3.1.14.2.(2) NON–COMBUSTIBLE ROOF CONSTRUCTION OBC 3.1.14.2.(2) NON–COMBUSTIBLE ROOF CONSTRUCTION

20. SPATIAL SEPARATION – CONSTRUCTION OF EXTERIOR WALLS — 3.2.3. / 9.10.14.

WALL	AREA OF EBF (m^2)	LD (M)	L/H OR H/L	PERMITTED MAX. % OF OPENINGS	PROPOSED % OF OPENINGS	FRR (HOURS)	LISTED DESIGN OR DESCRIPTION	COMB CONST	COMB. CONST. NONC. CLADDING	NON–COMB. CONSTR.
NORTH	137.24	>20		100%		N/A				✓
SOUTH	139.50	>20		100%		N/A				✓
EAST	–	–		–		–				–
WEST	166.00	>14.75		69.2%	61.6%	1 HR	200mm MASONRY OBC SB–2			✓

TABLE 3.2.3.1.C

21. PLUMBING FIXTURE REQUIREMENTS — OBC REFERENCE: ■ PART 3 ☐ PART 9

MALE /FEMALE COUNT @ 85 % / 15 %, EXCEPT AS NOTED OTHERWISE

	OCCUPANT LOAD	BC TABLE NUMBER	FIXTURES REQUIRED	FIXTURES PROVIDED	PART 3	PART 9
BASEMENT : OCCUPANCY						
OCCUPANCY						
1ST FLOOR : OCCUPANCY	38 MALE		3	EXISTING 3	3.7.4.9	
OCCUPANCY	7 FEMALE		1	EXISTING 1	3.7.4.9	
2ND FLOOR : OCCUPANCY						
OCCUPANCY						
3RD FLOOR : OCCUPANCY						
OCCUPANCY						
(ADJUST AS REQUIRED FOR ADDITIONAL FLOORS AND OCCUPANCIES)						

22. OTHER (DESCRIBE)

NOTE:

1. 171 000 L (45 000 GAL) FIRE WATER STORAGE TANKS C/W DRY HYDRANT PROVIDED

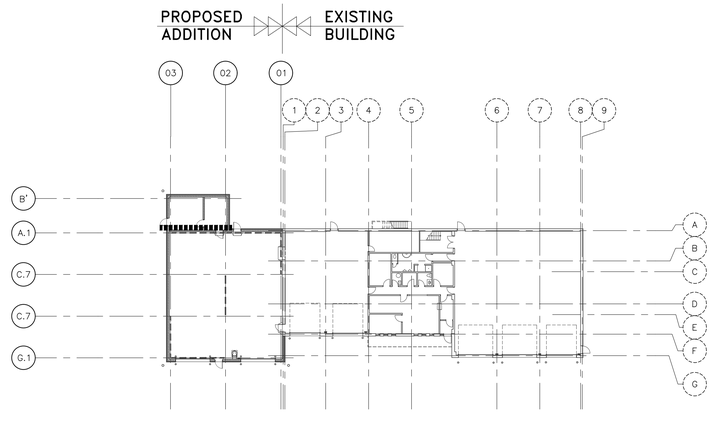

N

FIRE SEPARATION PLAN
SCALE 1:300

LEGEND :

DENOTES 1.0 HR RATED FIRE SEPARATION

ROD Contract No. T-1038-2019

DATE (mmm dd yyyy)	ISSUED FOR	REV
OCT 01 2018	TENDER	0

KEY PLAN

CONSULTANTS

IBI GROUP
100-175 Galaxy Boulevard
Toronto ON M9W 0C9 Canada
tel 416 679 1930 fax 416 675 4620
ibigroup.com

This drawing has been prepared solely for the use of the Regional Municipality of Durham and there are no representations of any kind made by IBI Group to any party with whom IBI Group has not entered into a contract

ONTARIO ASSOCIATION OF ARCHITECTS — ANTHONY VAN VEEN — LICENCE — 2016 — Mar 18/19

North Arrow — TO THE NORTH POLE

Detail Symbol — DETAIL NUMBER / LOCATION OR DETAIL SHEET

Project Manager: A. VAN VEEN	Architect/Engineer: A.V.V. / S.K.
Project Leader: R.K. / R.F.	Drawn: D.V.
Date: JAN 2013	Checked: L. BANDIERA

Client: THE REGIONAL MUNICIPALITY OF DURHAM — WORKS DEPARTMENT — WHITBY — ONTARIO

Project: EXPAND GARAGE SCUGOG DEPOT
10 REGIONAL RD. 21, R.R.#14, PORT PERRY

Drawing Title: CODE DATA MATRIX FIRE SEPARATION PLAN

Check Scale (may be photo-reduced): 0 — 1 Inch — 0 — 10mm

Project No.	Drawing No.
24RX12.0113	02–A00–00–01

User Name: Joseph Patoi Plot Date\Time: Monday, March 18, 2019 2:40:44 PM Path and File Name: j:\24rx12.0113_durham region oromo & scugog depots\5.9 drawing\59arch\layouts\02-a00-00-01.dwg

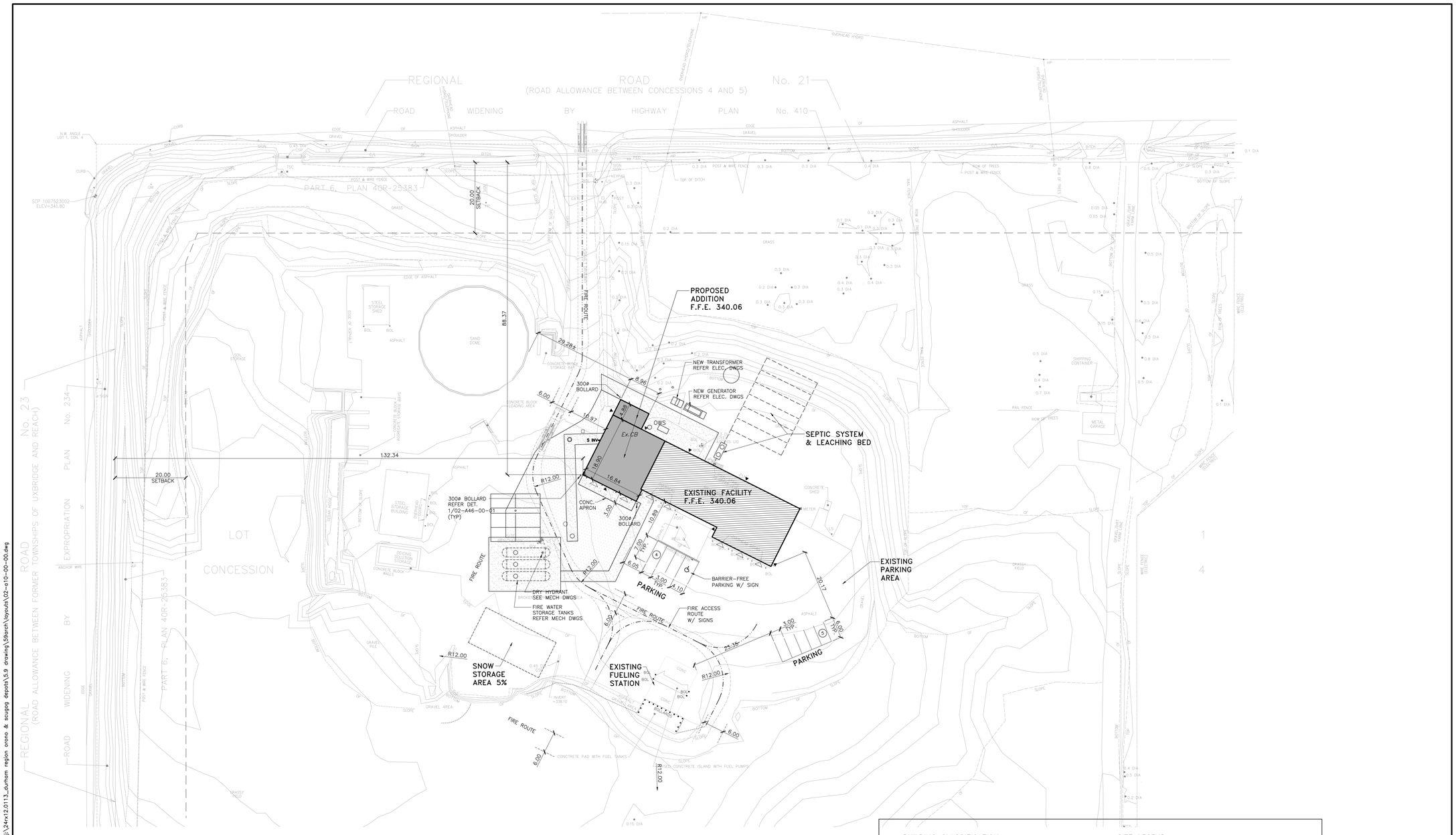

N

SITE PLAN

SCALE 1:400

BUILDING CLASSIFICATION :

PROPOSED ADDITION
GROUP F, DIVISION 2
F2 MEDIUM HAZARD INDUSTRIAL
OBC 3.2.2.70

SURVEY REFERENCE & LEGAL DESCRIPTION:

TOPOGRAPHIC PLAN OF
PART OF LOT 1
CONCESSION 4
TOWNSHIP OF SCUGOG
REGIONAL MUNICIPALITY OF DURHAM

J.D. BARNES LIMITED
LAND INFORMATION SPECIALISTS
JAN 08 2013

REF. NO. 12-25-724-00

SITE PLAN NOTES:

1. EXISTING SITE INFORMATION REFER TO CIVIL DRAWINGS
2. ALL GRADING ELEVATIONS AND UNDERGROUND SERVICES SHOWN ON THE DRAWING ARE FOR REFERENCE ONLY. FOR LOT GRADING AND STORM WATER DRAINAGE REFER TO SITE GRADING AND SERVICING DRAWINGS.
3. FOR EXTERIOR SITE LIGHTING REFER TO ELECTRICAL DRAWINGS.
4. ALL CONSTRUCTION WORK SHALL COMPLY WITH THE REGIONAL MUNICIPALITY OF DURHAM AND ONTARIO PROVINCIAL STANDARDS AND SPECIFICATIONS.

SITE LEGEND:

- PROPERTY LINE
- SETBACK LINE
- FIRE ACCESS ROUTE
- x — EXISTING CHAIN LINK FENCE (CLF)
- PEDESTRIAN DOOR LOCATION (EXIT/ACCESS DOOR)
- OVERHEAD DOOR LOCATION
- BARRIER FREE PARKING SPACE
- BARRIER FREE RAMP COMPLETE WITH CURB DEPRESSION
- CONCRETE CURB
- (10) PARKING COUNT
- FH FIRE HYDRANT
- BH BOREHOLE LOCATION
- SP SETTING OUT POINT
- LS LIGHT STANDARD
- EXISTING TREE TO REMAIN
- EXISTING TREE TO REMOVE
- EXISTING FACILITY
- PROPOSED ADDITION

ROD Contract No.
T-1038-2019

DATE (mmm dd yyyy)	ISSUED FOR	REV
OCT 01 2018	TENDER	0

KEY PLAN
NTS

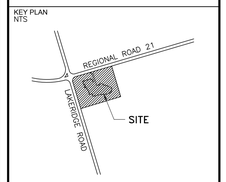

CONSULTANTS

IBI GROUP
100-175 Galaxy Boulevard
Toronto ON M9W 0C9 Canada
tel 416 679 1930 fax 416 675 4620
ibigroup.com

This drawing has been prepared solely for the use of the Regional Municipality of Durham and there are no representations of any kind made by IBI Group to any party with whom IBI Group has not entered into a contract

ONTARIO ASSOCIATION OF ARCHITECTS
ANTHONY VAN VEEN
LICENCE
2016
Mar 18/19

North Arrow

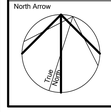

Detail Symbol

DETAIL NUMBER
LOCATION OR DETAIL SHEET

Project Manager	Architect/Engineer
A. VAN VEEN	A.V.V. / S.K.
Project Leader	Drawn
R.K. / R.F.	D.V.
Date	Checked
NOV 2012	L. BANDIERA

Client
THE REGIONAL MUNICIPALITY OF DURHAM
WORKS DEPARTMENT
WHITBY ONTARIO

Project
EXPAND GARAGE
SCUGOG DEPOT
10 REGIONAL RD. 21, R.R.#14, PORT PERRY

Drawing Title
SITE PLAN

Check Scale (may be photo-reduced)
0 1 Inch 0 10mm

Project No.	Drawing No.
24RX12.0113	02-A10-00-00

User Name: Joseph Patai Plot Date\Time: Monday, March 18, 2019 2:41:27 PM Path and File Name: J:\24rx12.0113_durham region orono & scugog depots\5.9 drawing\5Barch\layouts\02-a10-00-00.dwg

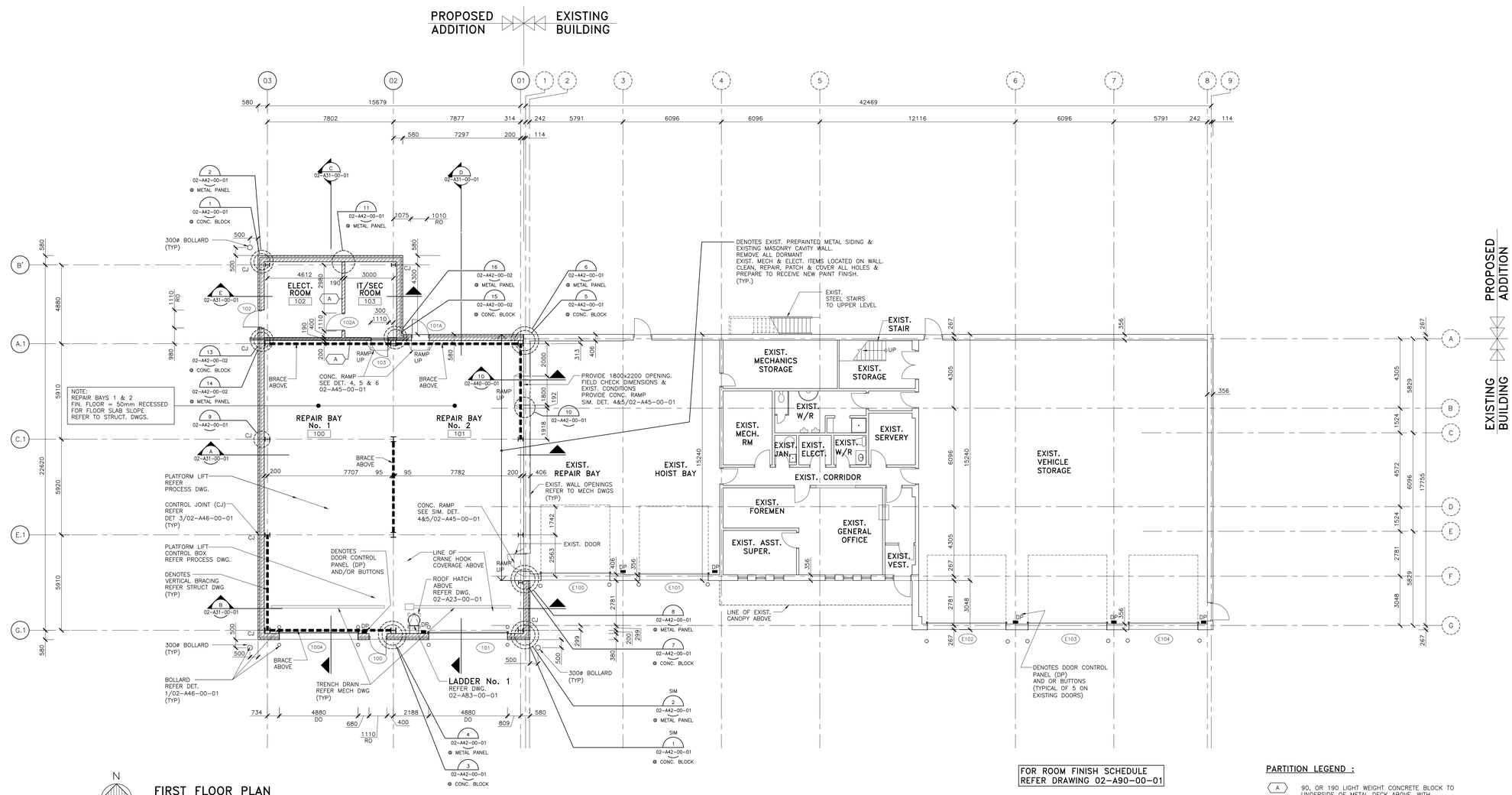

FIRST FLOOR PLAN

SCALE 1:100

FIN. FLOOR EL 0000 (UNLESS NOTED OTHERWISE)

(FIN. FLOOR EL. 340 060 GEODETIC EQUALS EL. 0000 DATUM

FOR ROOM FINISH SCHEDULE REFER DRAWING 02-A90-00-01

FOR DOOR SCHEDULE REFER DRAWING 02-A90-00-01

DENOTES 1.0 HR RATED FIRE SEPARATION

PARTITION LEGEND :

- A — 90, OR 190 LIGHT WEIGHT CONCRETE BLOCK TO UNDERSIDE OF METAL DECK ABOVE, WITH FIRE STOP W/ SMOKE SEALS BOTH SIDES (RATED) OR COMPRESSIBLE FILLER W/ SEALANT BOTH SIDES (NON RATED).
- A1 — SIMILAR TO WALL TYPE 'A' 3600 HIGH
- B — 16 GYPSUM BOARD ON BOTH SIDES OF 152 METAL STUDS @ 400 O.C. TO UNDERSIDE OF ROOF DECK ABOVE. PROVIDE TRACK AT TOP OF WALL FOR MIN. 25 DEFLECTION.

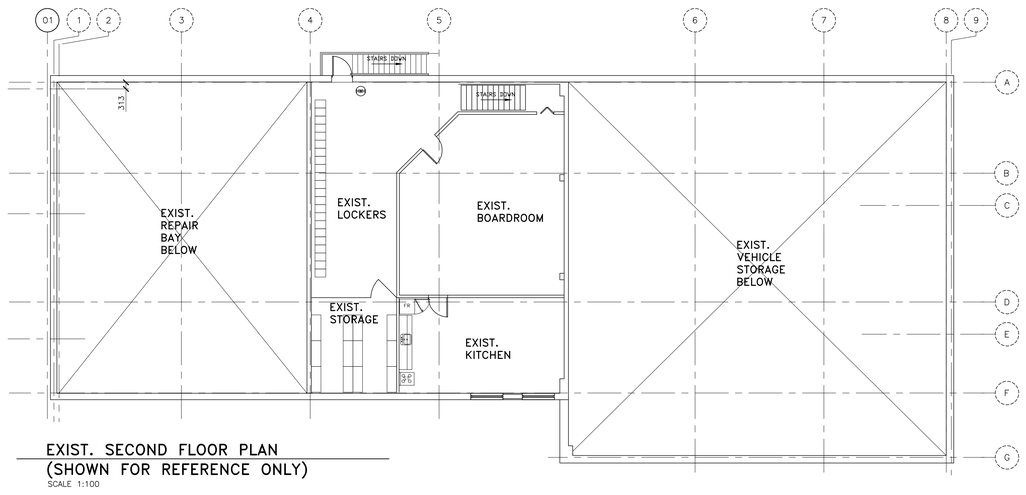

EXIST. SECOND FLOOR PLAN (SHOWN FOR REFERENCE ONLY)

SCALE 1:100

ROD Contract No. T-1038-2019

DATE (mmm dd yyyy)	ISSUED FOR	REV
OCT 01 2018	TENDER	0

KEY PLAN

CONSULTANTS

IBI GROUP
100-175 Galaxy Boulevard
Toronto ON M9W 0C9 Canada
tel 416 679 1930 fax 416 675 4620
ibigroup.com

This drawing has been prepared solely for the use of the Regional Municipality of Durham and there are no representations of any kind made by IBI Group to any party with whom IBI Group has not entered into a contract

ONTARIO ASSOCIATION OF ARCHITECTS — ANTHONY VAN VEEN — LICENCE — 2018 — Mar 18/19

North Arrow — True North

Detail Symbol — DETAIL NUMBER — LOCATION OR DETAIL SHEET

Project Manager: A. VAN VEEN	Architect/Engineer: A.V.V. / S.K.
Project Leader: R.K. / R.F.	Drawn: D.V.
Date: DEC 2012	Checked: L. BANDIERA

Client: THE REGIONAL MUNICIPALITY OF DURHAM — WORKS DEPARTMENT — WHITBY — ONTARIO

Project: EXPAND GARAGE SCUGOG DEPOT
10 REGIONAL RD. 21, R.R.#14, PORT PERRY

Drawing Title: FIRST FLOOR PLAN

Check Scale (may be photo-reduced): 0 — 1 inch; 0 — 10mm

Project No.	Drawing No.
24RX12.0113	02-A21-01-01

User Name: Joseph Patoi Plot Date\Time: Monday, March 18, 2019 2:41:46 PM Path and File Name: J:\24rx12.0113_durham region orono & scugog depots\5.9 drawing\5#arch\layouts\02-a21-01-01.dwg

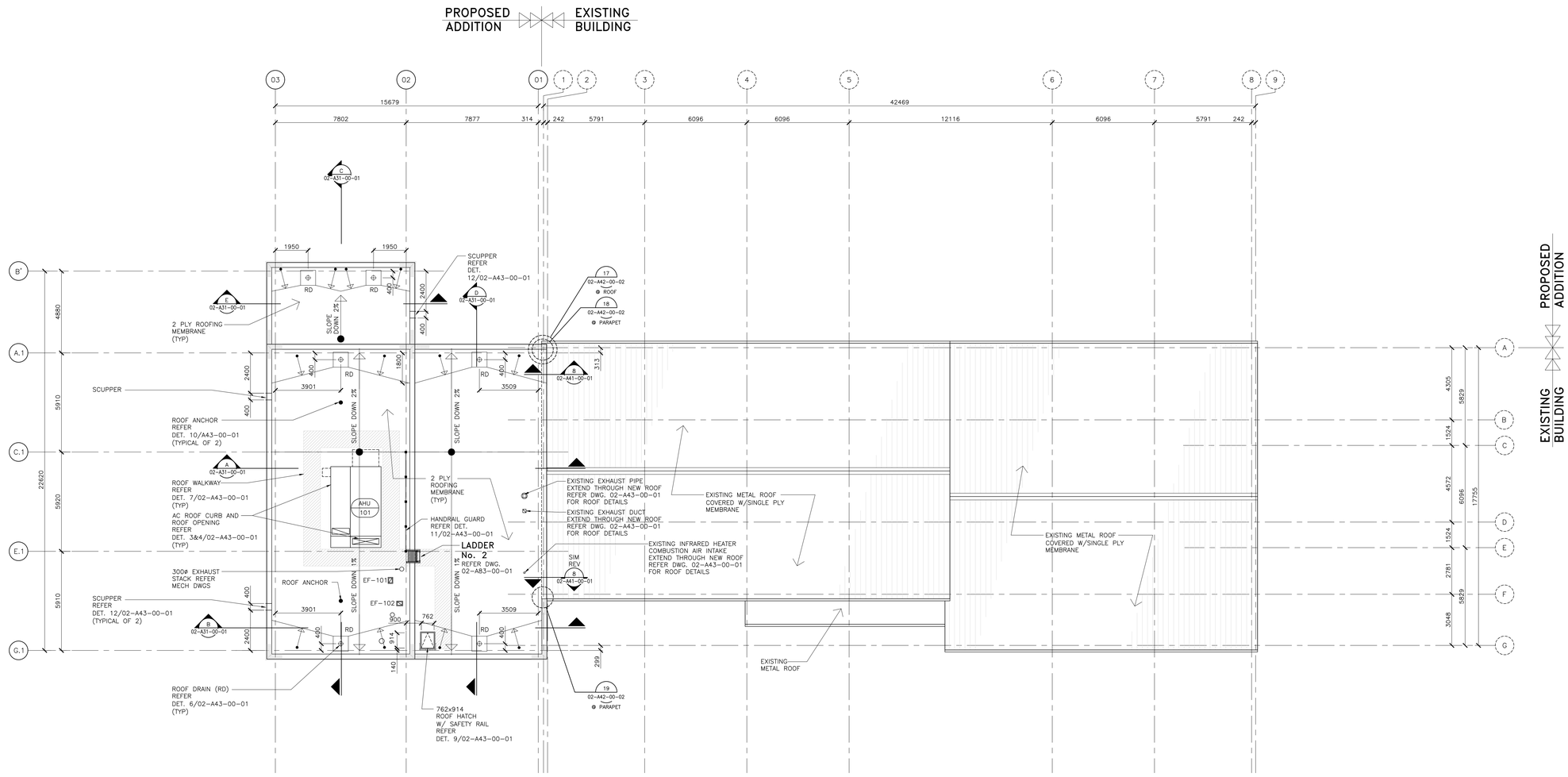

N

ROOF PLAN

SCALE 1:100

LEGEND:

RD DENOTES 100ø ROOF DRAIN (UNLESS NOTED OTHERWISE)

VERIFY AHU AND AC CURB AND ROOF OPENING CLEARANCES WITH AHU AND AC CONTRACTOR AND SHOP DRAWINGS

EXHAUST STACKS AND VENTS REFER DET. 1/02-A43-00-01 AND MECHANICAL DWGS FOR QUANTITY AND LOCATIONS

GAS VENTS REFER DET. 2/02-A43-00-01 AND MECHANICAL DWGS FOR QUANTITY AND LOCATIONS

ROD Contract No.
T-1038-2019

DATE (mmm dd yyyy)	ISSUED FOR	REV
OCT 01 2018	TENDER	0

KEY PLAN

CONSULTANTS

IBI GROUP
100-175 Galaxy Boulevard
Toronto ON M9W 0C9 Canada
tel 416 679 1930 fax 416 675 4620
ibigroup.com

This drawing has been prepared solely for the use of the Regional Municipality of Durham and there are no representations of any kind made by IBI Group to any party with whom IBI Group has not entered into a contract

ONTARIO ASSOCIATION OF ARCHITECTS
ANTHONY VAN VEEN
LICENCE
2012

North Arrow

Detail Symbol
DETAIL NUMBER
LOCATION OR DETAIL SHEET

Project Manager	Architect/Engineer
A. VAN VEEN	A.V.V. / S.K.
Project Leader	Drawn
R.K. / R.F.	D.V.
Date	Checked
DEC 2012	L. BANDIERA

Client
THE REGIONAL MUNICIPALITY OF DURHAM
WORKS DEPARTMENT
WHITBY ONTARIO

Project
EXPAND GARAGE
SCUGOG DEPOT
10 REGIONAL RD. 21, R.R.#14, PORT PERRY

Drawing Title
ROOF PLAN

Check Scale (may be photo-reduced)
0 1 Inch 0 10mm

Project No.	Drawing No.
24RX12.0113	02-A23-00-01

User Name: Joseph Patoi Plot Date\Time: Monday, March 18, 2019 2:42:03 PM Path and File Name: j:\24rx12.0113_durham region orono & scugog depots\5.9 drawing\59arch\layouts\02-a23-00-01.dwg

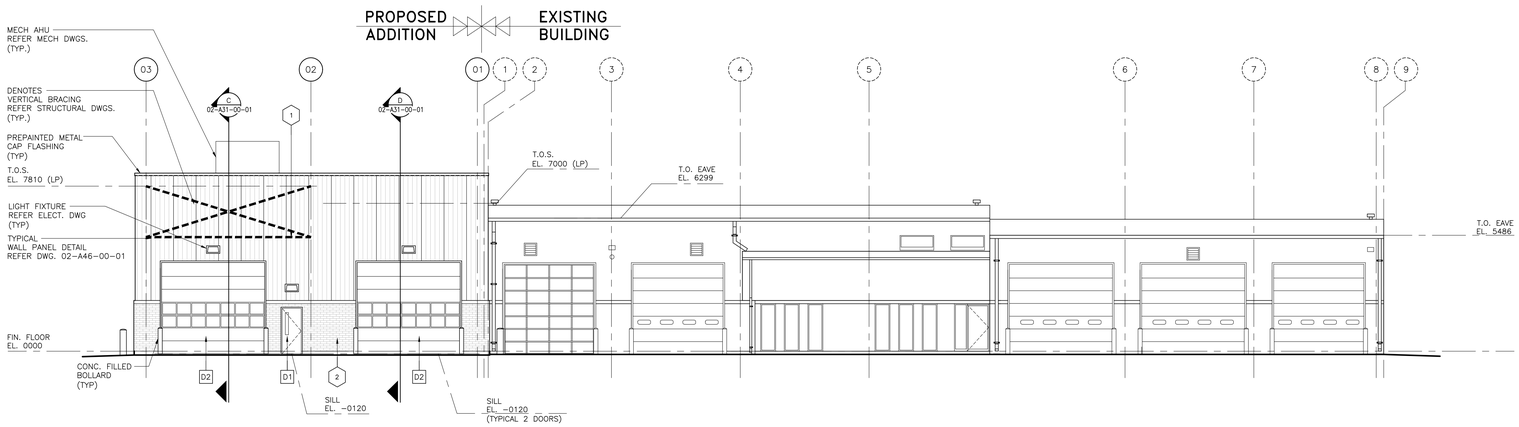

SOUTH ELEVATION

SCALE 1:100

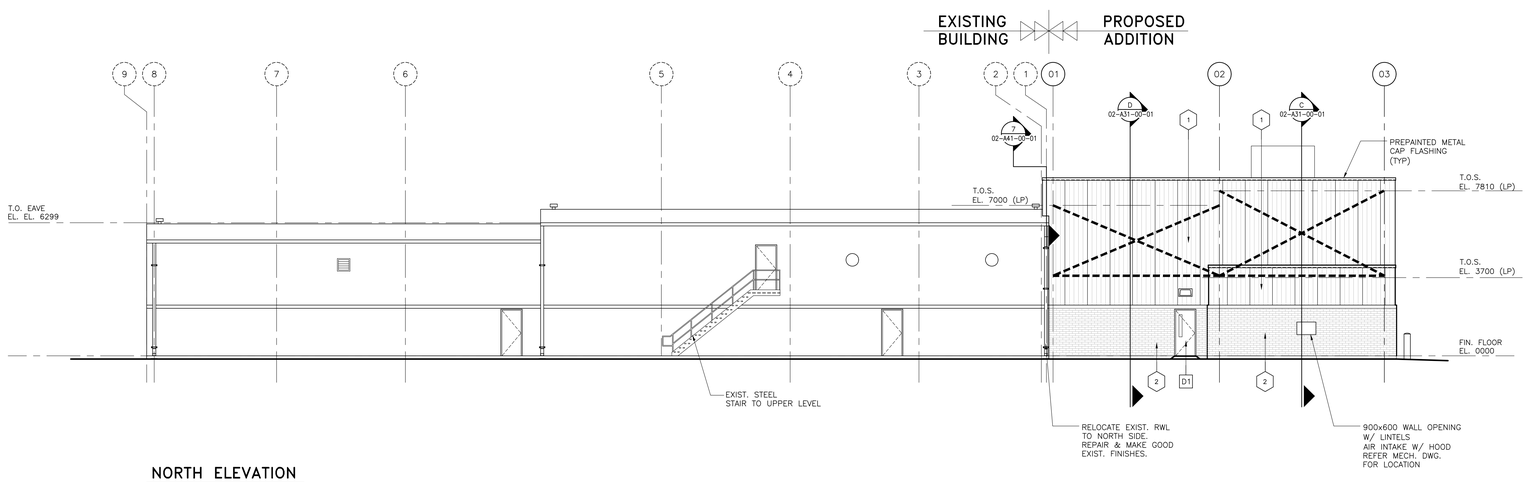

NORTH ELEVATION

SCALE 1:100

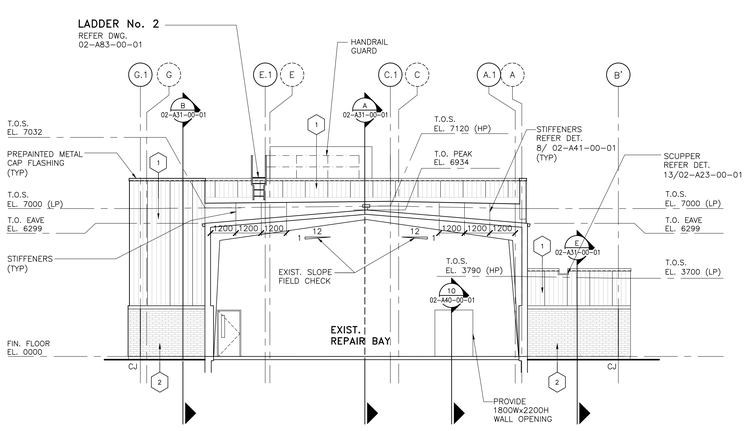

EAST ELEVATION @ COL. LINE '2' & '02'

SCALE 1:100

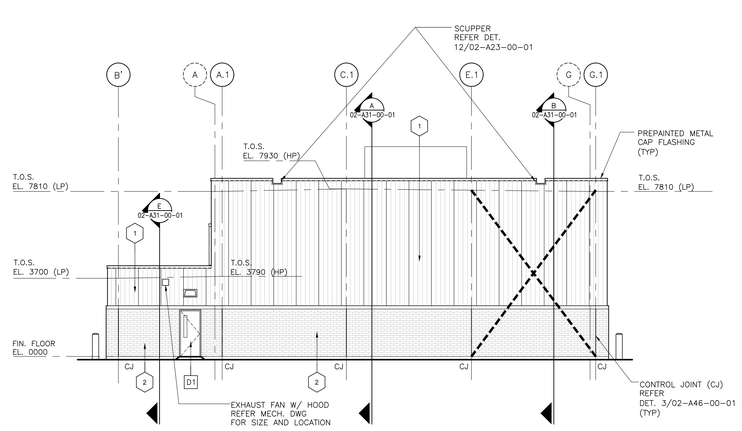

WEST ELEVATION

SCALE 1:100

LEGEND:

- (1) DENOTES PREPAINTED INSULATED METAL WALL PANELS MATCH EXISTING SIDING
- (2) DENOTES CLAY BRICK MASONRY VENEER PANEL (CONC. BLOCK W/ INSULATION & AIR SPACE) "HANSON IRONSPOT MK III"
- D1 – HOLLOW METAL INSULATED DOOR (900 W x 2150 H) "PAINTED BROWN TO MATCH EXISTING"
- D2 – SECTIONAL OVERHEAD DOOR (4880 W x 4270 H) "PAINTED BROWN TO MATCH EXISTING"

NOTE: PREPAINTED METAL FLASHING DARK BROWN TO MATCH EXISTING

DATE (mmm dd yyyy)	ISSUED FOR	REV
OCT 01 2018	TENDER	0

KEY PLAN

CONSULTANTS

IBI GROUP
100-175 Galaxy Boulevard
Toronto ON M9W 0C9 Canada
tel 416 679 1930 fax 416 675 4620
ibigroup.com

This drawing has been prepared solely for the use of the Regional Municipality of Durham and there are no representations of any kind made by IBI Group to any party with whom IBI Group has not entered into a contract

ONTARIO ASSOCIATION OF ARCHITECTS
ANTHONY VAN VEEN
LICENCE
2012

North Arrow

Detail Symbol

DETAIL NUMBER
LOCATION OR DETAIL SHEET

Project Manager	Architect/Engineer
A. VAN VEEN	A.V.V. / S.K.
Project Leader	Drawn
R.K. / R.F.	D.V.
Date	Checked
NOV 2012	L. BANDIERA

Client

THE REGIONAL MUNICIPALITY OF DURHAM
WORKS DEPARTMENT
WHITBY ONTARIO

Project

EXPAND GARAGE
SCUGOG DEPOT
10 REGIONAL RD. 21, R.R.#14, PORT PERRY

Drawing Title

BUILDING ELEVATIONS

Check Scale (may be photo-reduced)
0 — 1 inch 0 — 10mm

Project No.	Drawing No.
24RX12.0113	02-A30-00-01

ROD Contract No.
T-1038-2019

User Name: Joseph Patoi Plot Date\Time: Monday, March 18, 2019 2:42:18 PM Path and File Name: j:\24rx12.0113_durham region orono & scugog depots\3.9 drawing\39arch\layouts\02-a30-00-01.dwg

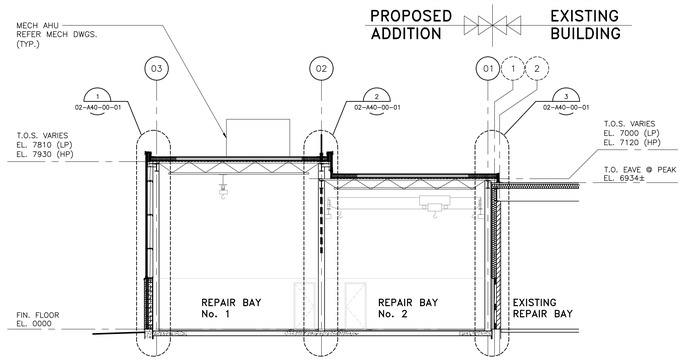

A 02-A21-01-01 BUILDING CROSS SECTION @ COL. LINE 'C.1'
SCALE 1:100

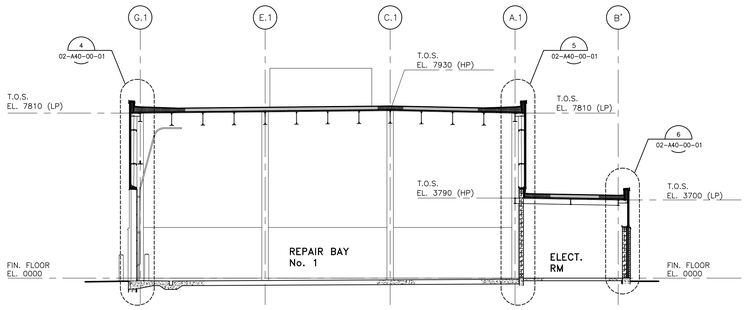

C 02-A21-01-01 BUILDING CROSS SECTION @ COL. LINE '02.5'
SCALE 1:100

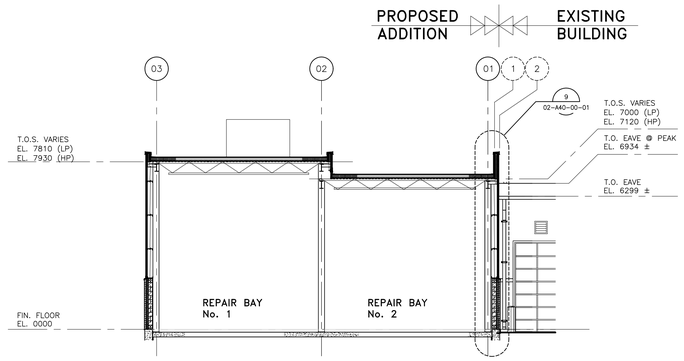

B 02-A21-01-01 BUILDING CROSS SECTION @ COL. LINE 'G'

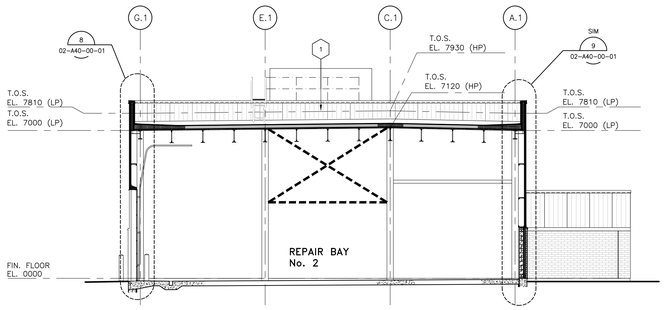

D 02-A21-01-01 BUILDING CROSS SECTION @ COL. LINE '01.5'
SCALE 1:100

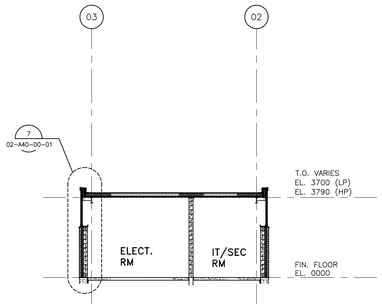

E 02-A21-01-01 BUILDING CROSS SECTION @ COL. LINE 'A.1'
SCALE 1:100

ROD Contract No.
T-1038-2019

DATE (mmm dd yyyy)	ISSUED FOR	REV
OCT 01 2018	TENDER	0

KEY PLAN

CONSULTANTS

IBI GROUP
100-175 Galaxy Boulevard
Toronto ON M9W 0C9 Canada
tel 416 679 1930 fax 416 675 4620
ibigroup.com

This drawing has been prepared solely for the use of the Regional Municipality of Durham and there are no representations of any kind made by IBI Group to any party with whom IBI Group has not entered into a contract

ONTARIO ASSOCIATION OF ARCHITECTS
ANTHONY VAN VEEN
LICENCE
Mar 18/19

North Arrow: True North

Detail Symbol: DETAIL NUMBER / LOCATION OR DETAIL SHEET

Project Manager	Architect/Engineer
A. VAN VEEN	A.V.V. / S.K.
Project Leader	Drawn
R.K. / R.F.	D.V. / M.F.
Date	Checked
NOV 2012	L. BANDIERA

Client
THE REGIONAL MUNICIPALITY OF DURHAM
WORKS DEPARTMENT
WHITBY ONTARIO

Project
EXPAND GARAGE
SCUGOG DEPOT
10 REGIONAL RD. 21, R.R.#14, PORT PERRY

Drawing Title
BUILDING CROSS SECTIONS

Check Scale (may be photo-reduced)
0 1 Inch 0 10mm

Project No.	Drawing No.
24RX12.0113	02-A31-00-01

User Name: Joseph Potoi Plot Date\Time: Monday, March 18, 2019 2:42:35 PM Path and File Name: j:\24rx12.0113_durham region arena & scugog depots\5.9 drawing\59arch\layouts\02-a31-00-01.dwg

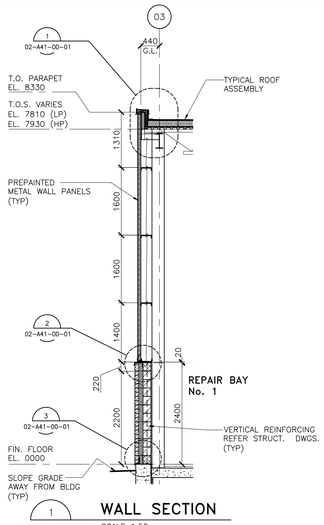

1 WALL SECTION
02-A31-00-01 SCALE 1:50

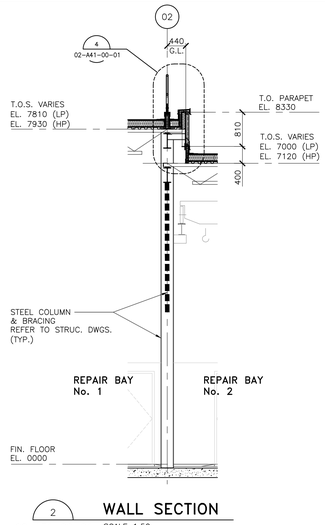

2 WALL SECTION
02-A31-00-01 SCALE 1:50

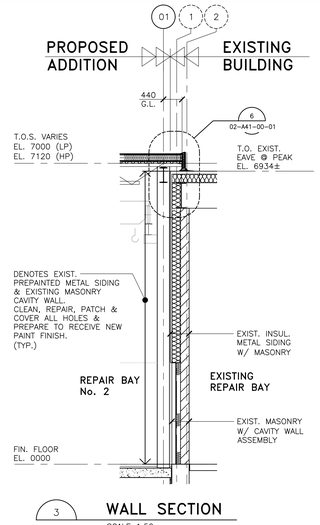

3 WALL SECTION
02-A31-00-01 SCALE 1:50

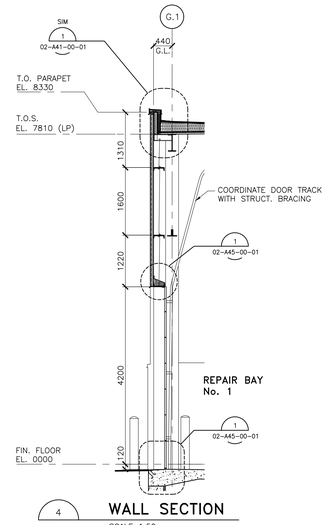

4 WALL SECTION
02-A31-00-01 SCALE 1:50

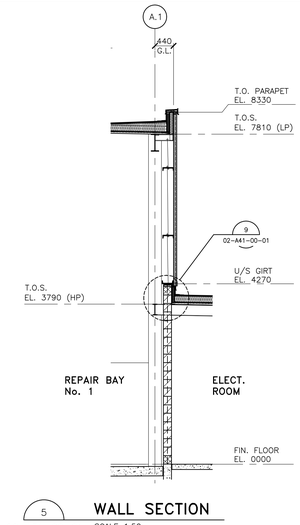

5 WALL SECTION
02-A31-00-01 SCALE 1:50

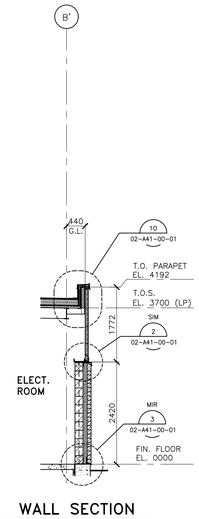

6 WALL SECTION
02-A31-00-01 SCALE 1:50

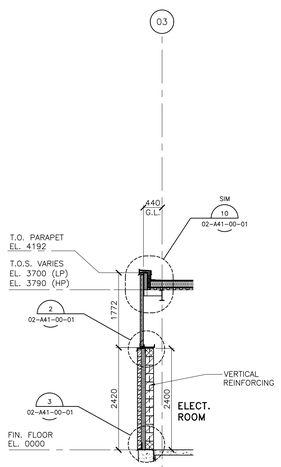

7 WALL SECTION
02-A31-00-01 SCALE 1:50

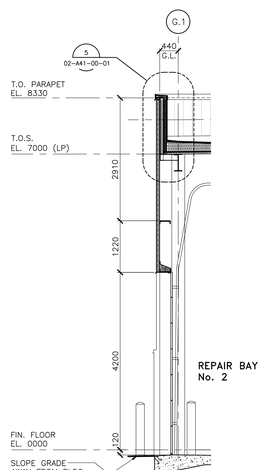

8 WALL SECTION
02-A31-00-01 SCALE 1:50

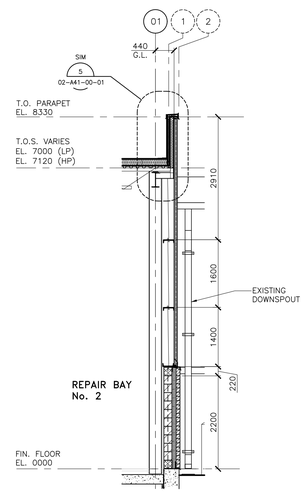

9 WALL SECTION
02-A31-00-01 SCALE 1:50

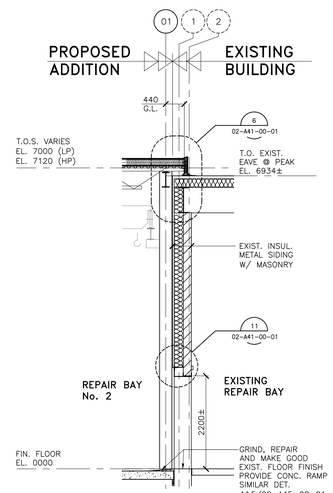

10 WALL SECTION
02-A21-01-01 SCALE 1:50

ROD Contract No.
T-1038-2019

DATE (mmm dd yyyy)	ISSUED FOR	REV
OCT 01 2018	TENDER	0

KEY PLAN

CONSULTANTS

IBI GROUP
100-175 Galaxy Boulevard
Toronto ON M9W 0C9 Canada
tel 416 679 1930 fax 416 675 4620
ibigroup.com

This drawing has been prepared solely for the use of the Regional Municipality of Durham and there are no representations of any kind made by IBI Group to any party with whom IBI Group has not entered into a contract

ONTARIO ASSOCIATION OF ARCHITECTS
ANTHONY VAN VEEN
LICENCE
2739
Mar 18/19

North Arrow

Detail Symbol
DETAIL NUMBER
LOCATION OR DETAIL SHEET

Project Manager	Architect/Engineer
A. VAN VEEN	A.V.V. / S.K.
Project Leader	Drawn
R.K. / R.F.	M.F. / D.V.
Date	Checked
NOV 2012	L. BANDIERA

Client
THE REGIONAL MUNICIPALITY OF DURHAM
WORKS DEPARTMENT
WHITBY ONTARIO

Project
EXPAND GARAGE
SCUGOG DEPOT
10 REGIONAL RD. 21, R.R.#14, PORT PERRY

Drawing Title
WALL SECTIONS

Check Scale (may be photo-reduced)
0 1 Inch 0 10mm

Project No.	Drawing No.
24RX12.0113	02-A40-00-01

User Name: Joseph Patoi Plot Date\Time: Monday, March 18, 2019 2:42:54 PM Path and File Name: j:\24rx12.0113_durham region orono & scugog depots\5.9 drawing\5$arch\layouts\02-a40-00-01.dwg

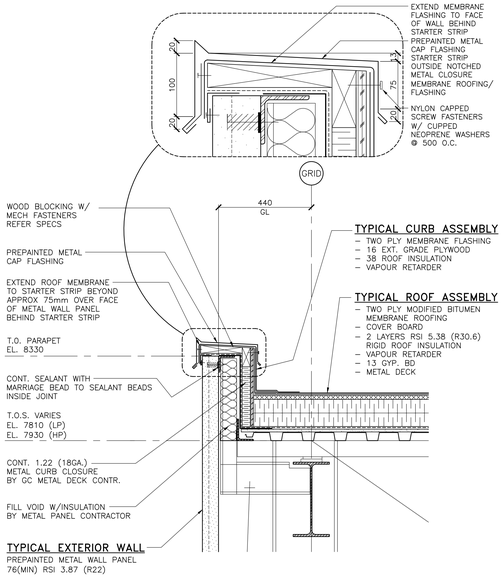

1 TYPICAL — SECTION DETAIL
SCALE 1:10

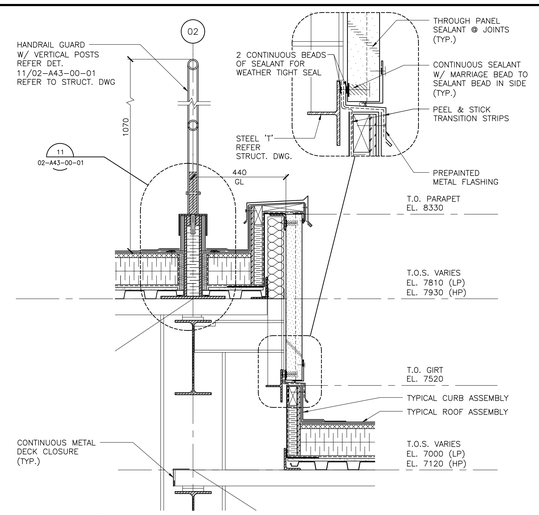

4 02-A40-00-01 — SECTION DETAIL
SCALE 1:10

FOR ADDITIONAL NOTES REFER DET. 1/02-A41-00-01

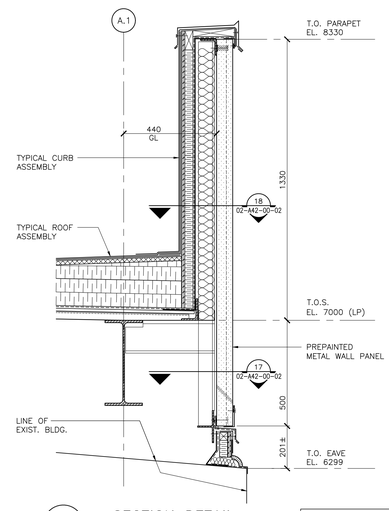

7 02-A30-00-01 — SECTION DETAIL
SCALE 1:10

FOR ADDITIONAL NOTES REFER DET. 1 & 6 /02-A41-00-01

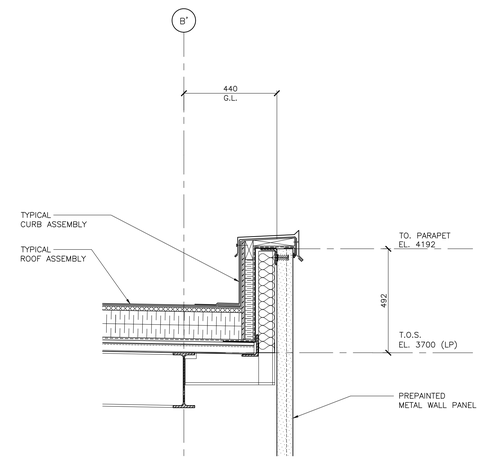

10 02-A40-00-01 — SECTION DETAIL
SCALE 1:10

FOR ADDITIONAL NOTES REFER DET. 1/02-A41-00-01

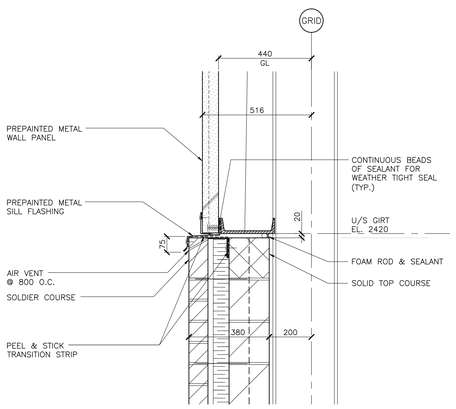

2 TYPICAL — SECTION DETAIL
SCALE 1:10

FOR ADDITIONAL NOTES REFER DET. 3 & 4/02-A41-00-01

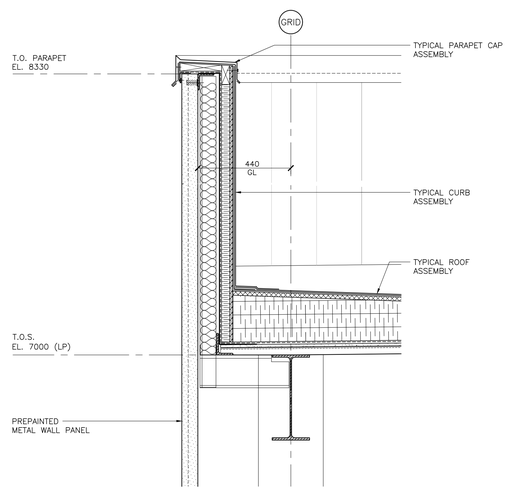

5 TYPICAL — SECTION DETAIL
SCALE 1:10

FOR ADDITIONAL NOTES REFER DET. 1 /02-A41-00-01

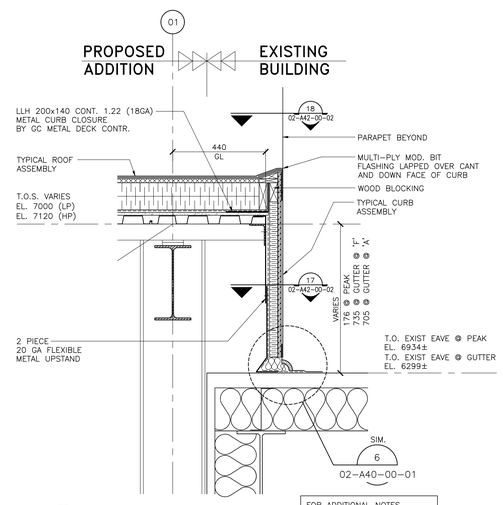

8 02-A23-00-01 — SECTION DETAIL
SCALE 1:10

FOR ADDITIONAL NOTES REFER DET. 6/02-A41-00-01

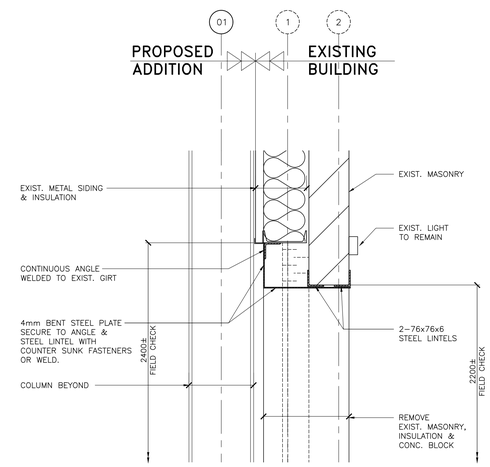

11 02-A40-00-01 — SECTION DETAIL

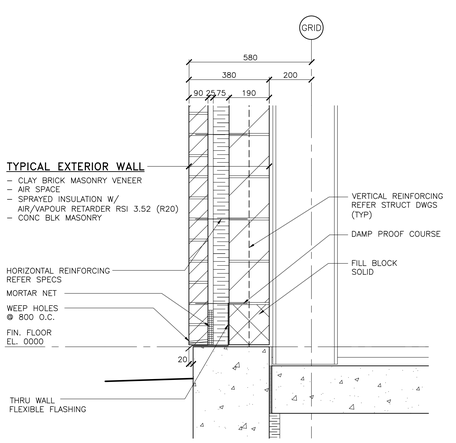

3 TYPICAL — SECTION DETAIL
SCALE 1:10

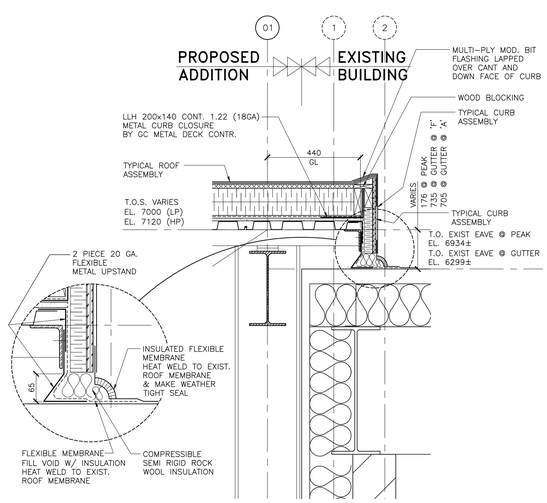

6 02-A40-00-01 — SECTION DETAIL
SCALE 1:10

FOR ADDITIONAL NOTES REFER DET. 8/02-A41-00-01

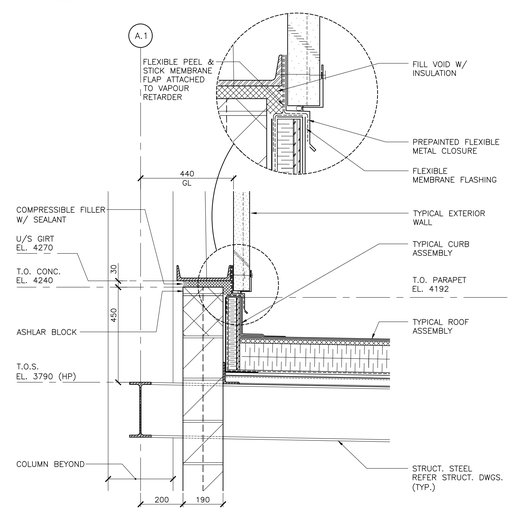

9 02-A40-00-01 — SECTION DETAIL
SCALE 1:10

FOR ADDITIONAL NOTES REFER DET. 1 & 4 /02-A41-00-01

ROD Contract No.
T-1038-2019

DATE (mmm dd yyyy)	ISSUED FOR	REV
OCT 01 2018	TENDER	0

KEY PLAN

CONSULTANTS

IBI GROUP
100-175 Galaxy Boulevard
Toronto ON M9W 0C9 Canada
tel 416 679 1930 fax 416 675 4620
ibigroup.com

This drawing has been prepared solely for the use of the Regional Municipality of Durham and there are no representations of any kind made by IBI Group to any party with whom IBI Group has not entered into a contract

ONTARIO ASSOCIATION OF ARCHITECTS — ANTHONY VAN VEEN — LICENCE — STAMP

North Arrow

Detail Symbol: DETAIL NUMBER / LOCATION OR DETAIL SHEET

Project Manager: A. VAN VEEN	Architect/Engineer: A.V.V. / S.K.
Project Leader: R.K. / R.F.	Drawn: M.F. / D.V.
Date: NOV 2012	Checked: L. BANDIERA

Client
THE REGIONAL MUNICIPALITY OF DURHAM
WORKS DEPARTMENT
WHITBY ONTARIO

Project
EXPAND GARAGE
SCUGOG DEPOT
10 REGIONAL RD. 21, R.R.#14, PORT PERRY

Drawing Title
SECTION DETAILS

Check Scale (may be photo-reduced): 0 — 1 Inch; 0 — 10mm

Project No.	Drawing No.
24RX12.0113	02-A41-00-01

User Name: Joseph Patai Plot Date\Time: Monday, March 18, 2019 2:43:12 PM Path and File Name: J:\24rx12.0113_durham region orono & scugog depots\5.9 drawing\5Barch\layouts\02-a41-00-01.dwg

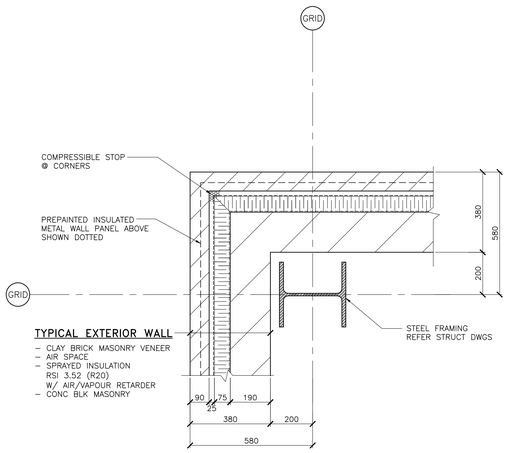

1 TYPICAL **PLAN DETAIL** SCALE 1:10

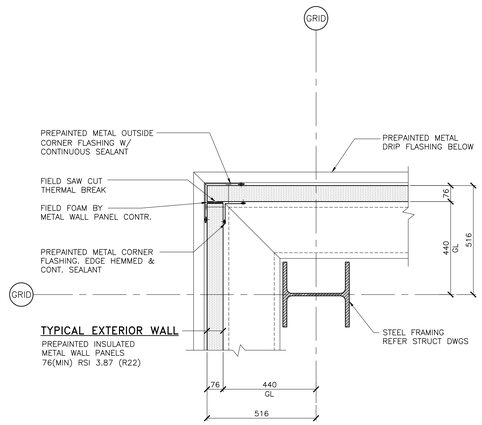

2 TYPICAL **PLAN DETAIL** SCALE 1:10

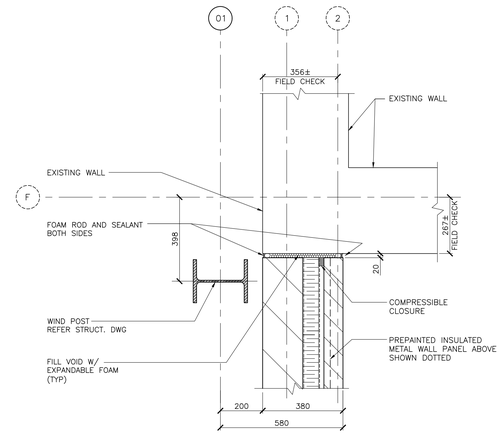

7 02-A21-01-01 **PLAN DETAIL** SCALE 1:10

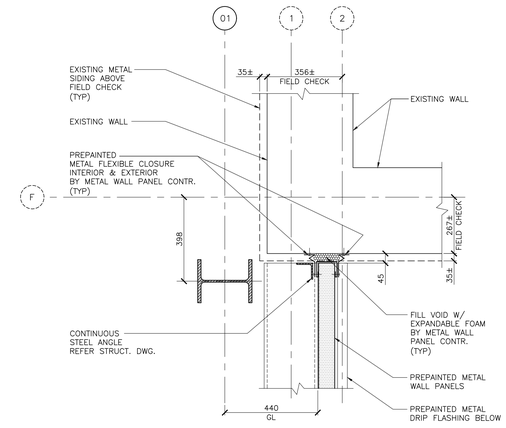

8 02-A21-01-01 **PLAN DETAIL** SCALE 1:10

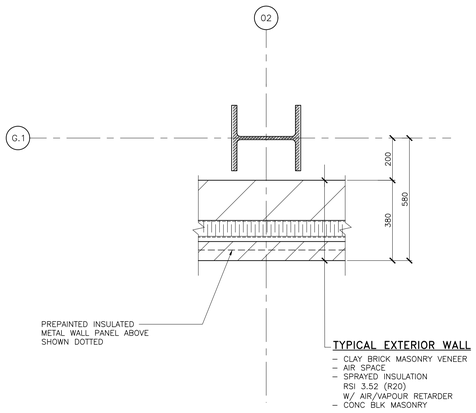

3 02-A21-01-01 **PLAN DETAIL** SCALE 1:10

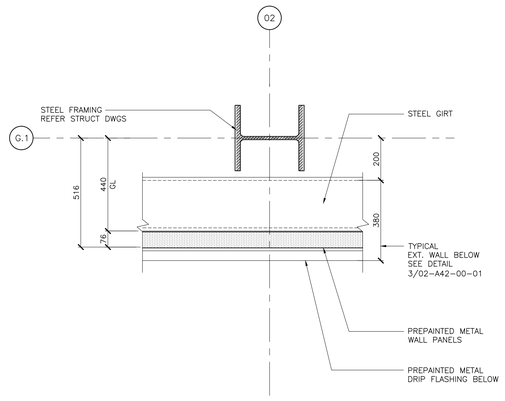

4 02-A21-01-01 **PLAN DETAIL** SCALE 1:10

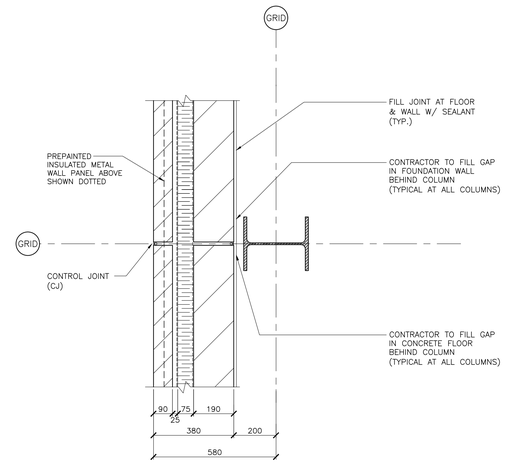

9 TYPICAL **PLAN DETAIL** SCALE 1:10

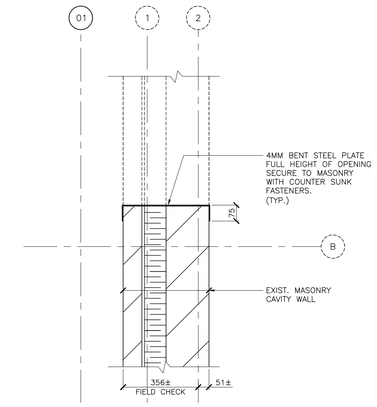

10 02-A21-01-01 **PLAN DETAIL** SCALE 1:10

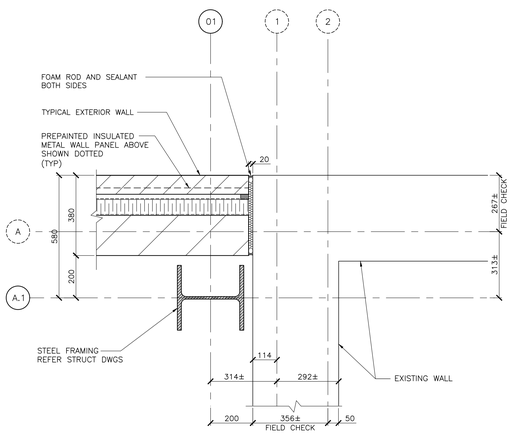

5 02-A21-01-01 **PLAN DETAIL** SCALE 1:10

FOR ADDITIONAL NOTES REFER DET. 7/02-A42-00-01

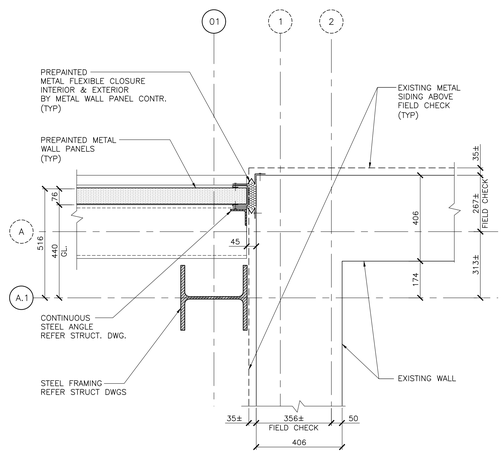

6 02-A21-01-01 **PLAN DETAIL** SCALE 1:10

FOR ADDITIONAL NOTES REFER DET. 8/02-A42-00-01

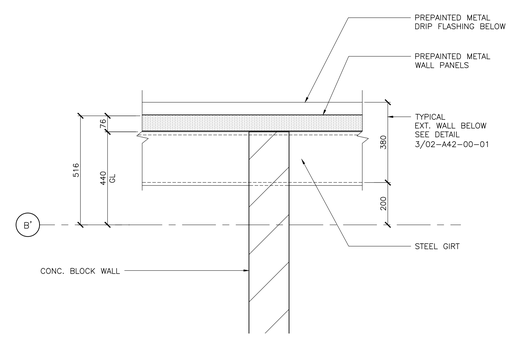

11 02-A21-01-01 **PLAN DETAIL @ METAL PANEL** SCALE 1:10

ROD Contract No.
T-1038-2019

DATE (mmm dd yyyy)	ISSUED FOR	REV
OCT 01 2018	TENDER	0

KEY PLAN

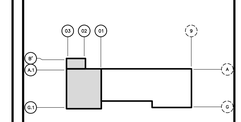

CONSULTANTS

IBI GROUP
100-175 Galaxy Boulevard
Toronto ON M9W 0C9 Canada
tel 416 679 1930 fax 416 675 4620
ibigroup.com

This drawing has been prepared solely for the use of the Regional Municipality of Durham and there are no representations of any kind made by IBI Group to any party with whom IBI Group has not entered into a contract

ONTARIO ASSOCIATION OF ARCHITECTS
ANTHONY VAN VEEN
LICENCE
2012
Mar 18/19

North Arrow

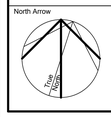

Detail Symbol

Project Manager	Architect/Engineer
A. VAN VEEN	A.V.V. / S.K.
Project Leader	Drawn
R.K. / R.F.	M.F. / D.V.
Date	Checked
DEC 2012	L. BANDIERA

Client

THE REGIONAL MUNICIPALITY OF DURHAM
WORKS DEPARTMENT
WHITBY ONTARIO

Project

EXPAND GARAGE
SCUGOG DEPOT
10 REGIONAL RD. 21, R.R.#14, PORT PERRY

Drawing Title

PLAN DETAILS

Check Scale (may be photo-reduced)
0 1 inch 0 10mm

Project No.	Drawing No.
24RX12.0113	02-A42-00-01

User Name: Joseph Patoi Plot Date\Time: Monday, March 18, 2019 2:43:30 PM Path and File Name: j:\24rx12.0113_durham region orono & scugog depots\5.9 drawing\5#arch\layouts\02-a42-00-01.dwg

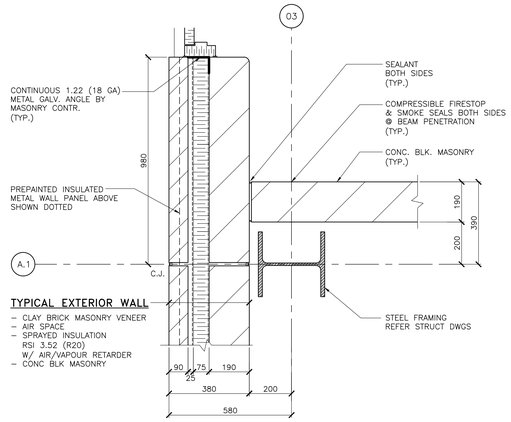

13 PLAN DETAIL
02–A21–01–01 SCALE 1:10

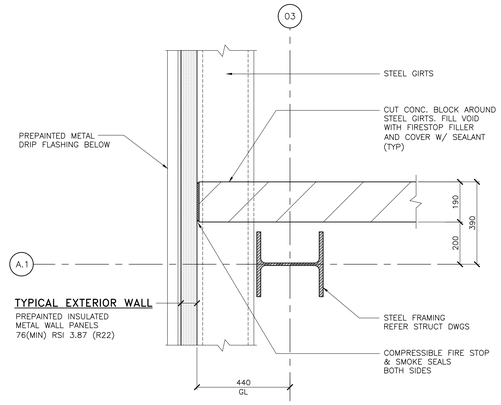

14 PLAN DETAIL
02–A21–01–01 SCALE 1:10

FOR ADDITIONAL NOTES REFER DET. 13/02–A42–00–02

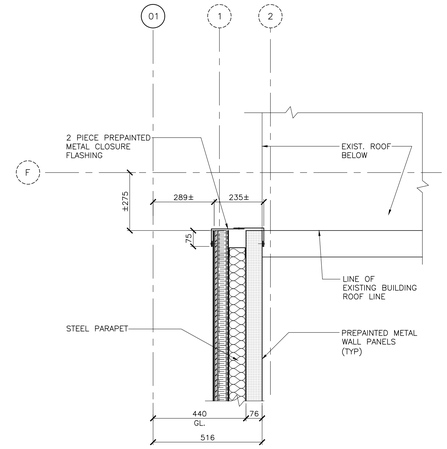

19 PLAN DETAIL
02–A23–00–01 SCALE 1:10

FOR ADDITIONAL NOTES REFER DET. 18/02–A42–00–02

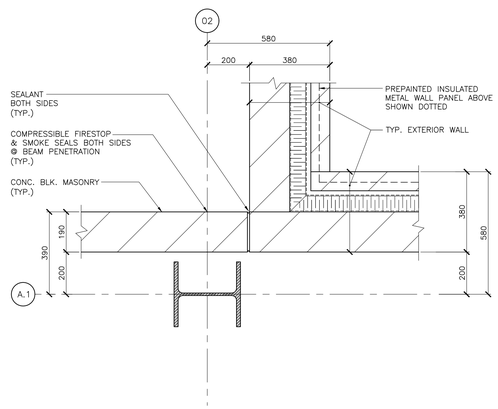

15 PLAN DETAIL
02–A21–01–01 SCALE 1:10

FOR ADDITIONAL NOTES REFER DET. 13/02–A42–00–02

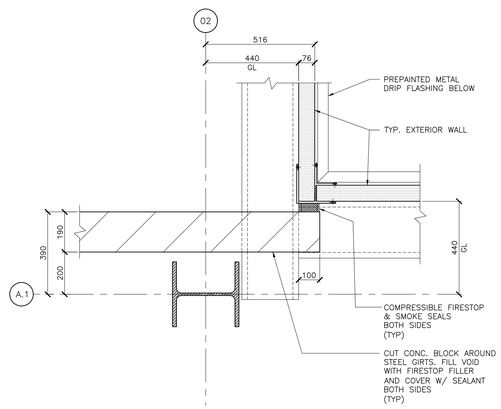

16 PLAN DETAIL
02–A21–01–01 SCALE 1:10

FOR ADDITIONAL NOTES REFER DET. 14&15/02–A42–00–02

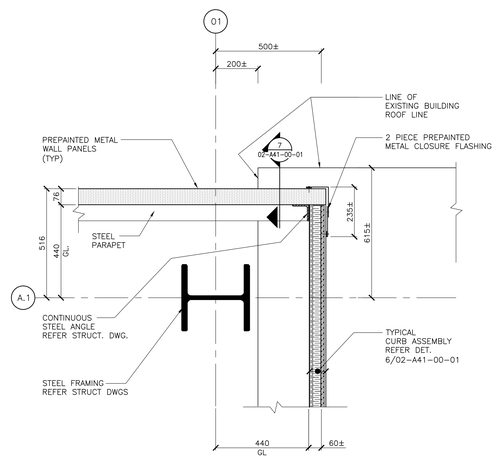

17 PLAN DETAIL
02–A23–00–01 SCALE 1:10

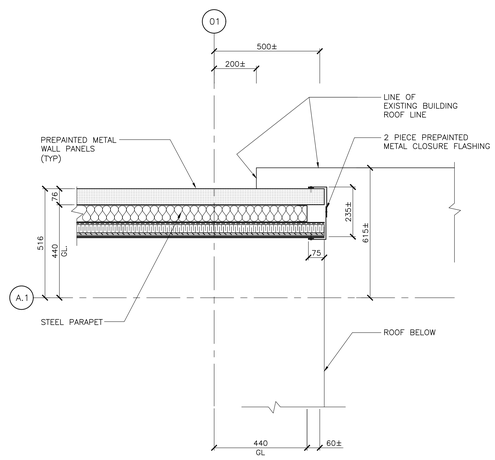

18 PLAN DETAIL
02–A23–00–01 SCALE 1:10

FOR ADDITIONAL NOTES REFER DET. 17/02–A42–00–02

ROD Contract No.
T-1038-2019

DATE (mmm dd yyyy)	ISSUED FOR	REV
OCT 01 2018	TENDER	0

KEY PLAN

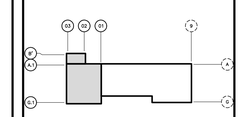

CONSULTANTS

IBI GROUP
100-175 Galaxy Boulevard
Toronto ON M9W 0C9 Canada
tel 416 679 1930 fax 416 675 4620
ibigroup.com

This drawing has been prepared solely for the use of the Regional Municipality of Durham and there are no representations of any kind made by IBI Group to any party with whom IBI Group has not entered into a contract

ONTARIO ASSOCIATION OF ARCHITECTS
ANTHONY VAN VEEN
LICENCE
2018
Mar 18/19

North Arrow

True North

Detail Symbol

DETAIL NUMBER
LOCATION OR DETAIL SHEET

Project Manager	Architect/Engineer
A. VAN VEEN	A.V.V. / S.K.
Project Leader	Drawn
R.K. / R.F.	D.V.
Date	Checked
AUG 2017	L. BANDIERA

Client
THE REGIONAL MUNICIPALITY OF DURHAM
WORKS DEPARTMENT
WHITBY ONTARIO

Project
EXPAND GARAGE
SCUGOG DEPOT
10 REGIONAL RD. 21, R.R.#14, PORT PERRY

Drawing Title
PLAN DETAILS

Check Scale (may be photo-reduced)
0 1 inch 0 10mm

Project No.	Drawing No.
24RX12.0113	02–A42–00–02

User Name: Joseph Patoi Plot Date\Time: Monday, March 18, 2019 2:43:50 PM Path and File Name: j:\24rx12.0113_durham region orono & scugog depots\5.9 drawing\5farch\layouts\02–a42–00–02.dwg

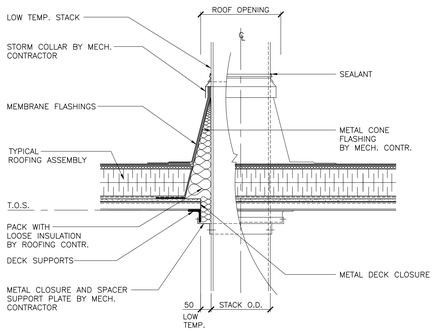

1 TYPICAL — MECHANICAL LOW TEMP. UH DETAIL
SCALE 1:10

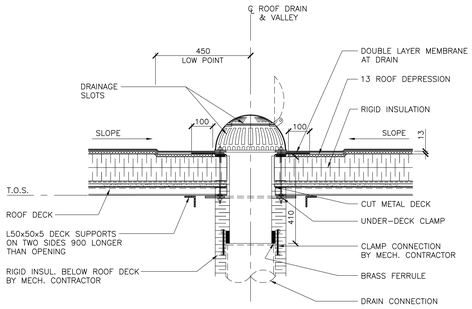

5 TYPICAL — ROOF DRAIN DETAIL
SCALE 1:10

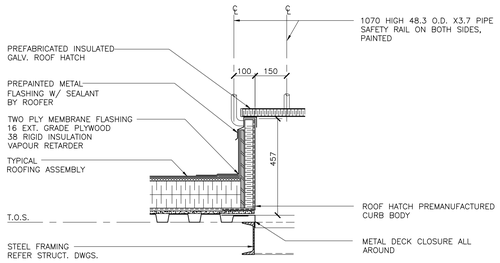

9 02-A23-00-01 — ROOF HATCH DETAIL
SCALE 1:10

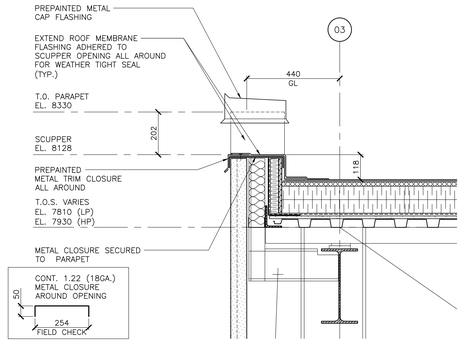

12 TYPICAL — SCUPPER DETAIL
SCALE 1:10

FOR ADDITIONAL NOTES REFER DET. 1/02-A41-00-01

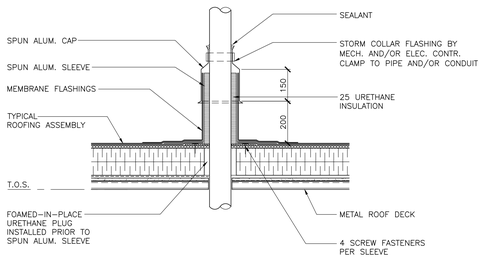

2 TYPICAL — PIPE/CONDUIT ENTRY THROUGH ROOF
SCALE 1:10

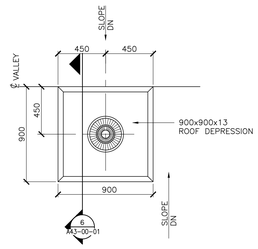

6 TYPICAL — ROOF DRAIN WITH DEPRESSION
SCALE 1:20

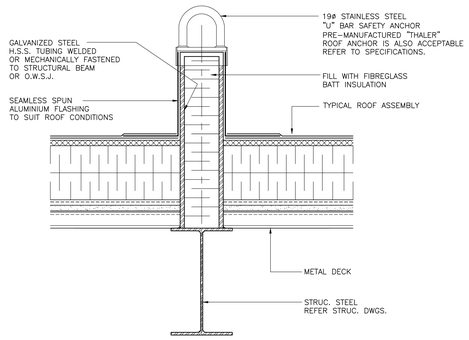

10 TYPICAL — ROOF ANCHOR DETAIL
SCALE 1:5

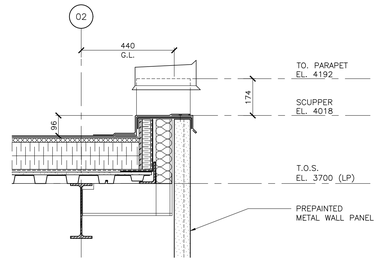

13 TYPICAL — SCUPPER DETAIL
SCALE 1:10

FOR ADDITIONAL NOTES REFER DET. 12/02-A43-00-01

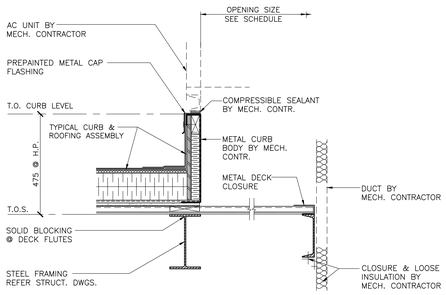

3 TYPICAL — ROOF SUPPORT FOR MECH AC UNIT
SCALE 1:10

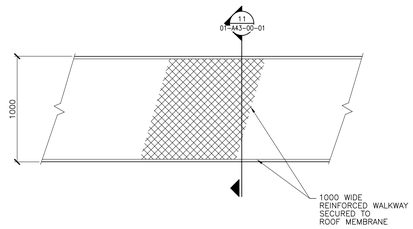

7 TYPICAL — ROOF WALKWAY
SCALE 1:20

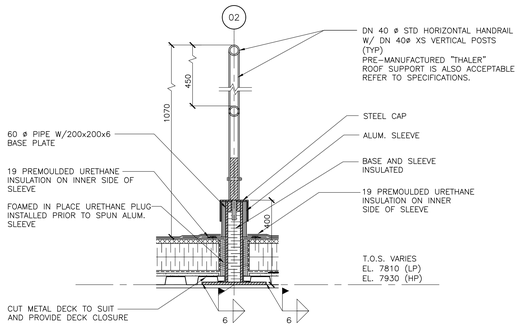

11 02-A23-00-01 — DETAIL
SCALE 1:10

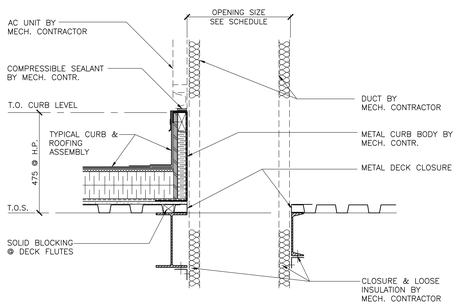

4 TYPICAL — ROOF SUPPORT FOR MECH AC UNIT
SCALE 1:10

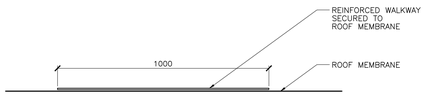

8 TYPICAL — SECTION
SCALE 1:10

ROD Contract No.
T-1038-2019

DATE (mmm dd yyyy)	ISSUED FOR	REV
OCT 01 2018	TENDER	0

KEY PLAN

CONSULTANTS

IBI GROUP
100-175 Galaxy Boulevard
Toronto ON M9W 0C9 Canada
tel 416 679 1930 fax 416 675 4620
ibigroup.com

This drawing has been prepared solely for the use of the Regional Municipality of Durham and there are no representations of any kind made by IBI Group to any party with whom IBI Group has not entered into a contract

ONTARIO ASSOCIATION OF ARCHITECTS
ANDREW VAN VEEN
LICENCE
SEAL
Mar 18/19

North Arrow

Detail Symbol
DETAIL NUMBER
LOCATION OR DETAIL SHEET

Project Manager	Architect/Engineer
A. VAN VEEN	A.V.V. / S.K.
Project Leader	Drawn
R.K. / R.F.	M.F. / D.V.
Date	Checked
NOV 2012	L. BANDIERA

Client
THE REGIONAL MUNICIPALITY OF DURHAM
WORKS DEPARTMENT
WHITBY ONTARIO

Project
EXPAND GARAGE
SCUGOG DEPOT
10 REGIONAL RD. 21, R.R.#14, PORT PERRY

Drawing Title
ROOF DETAILS

Check Scale (may be photo-reduced)
0 1 Inch 0 10mm

Project No.	Drawing No.
24RX12.0113	02-A43-00-01

User Name: Joseph Potoi Plot Date\Time: Monday, March 18, 2019 2:44:10 PM Path and File Name: j:\24rx12.0113_durham region arena & scugog depots\5.9 drawing\5March\layouts\02-a43-00-01.dwg

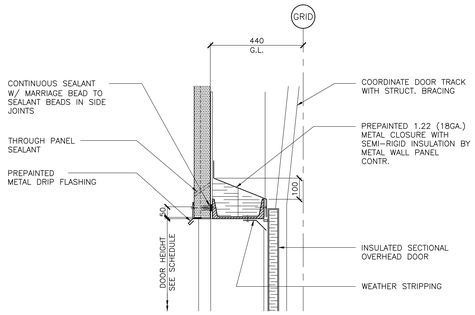

HEAD

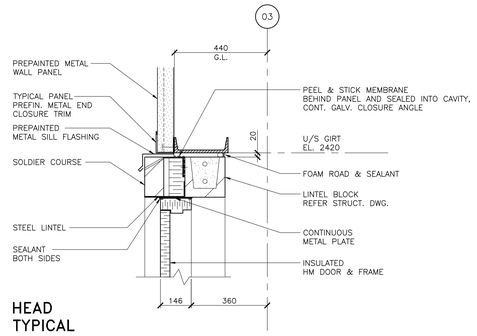

HEAD TYPICAL

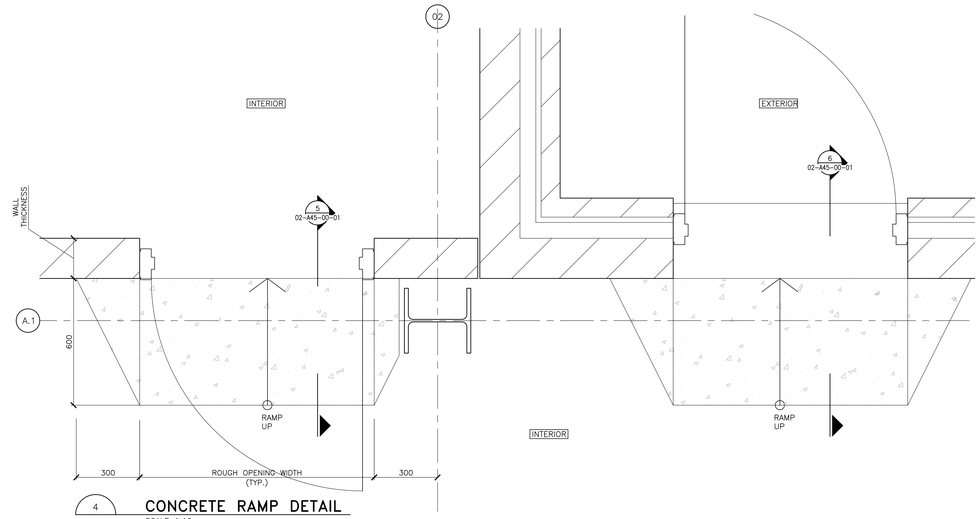

4 02-A45-00-01 CONCRETE RAMP DETAIL
SCALE 1:10

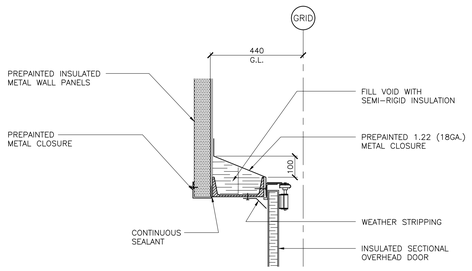

JAMB @ METAL PANEL

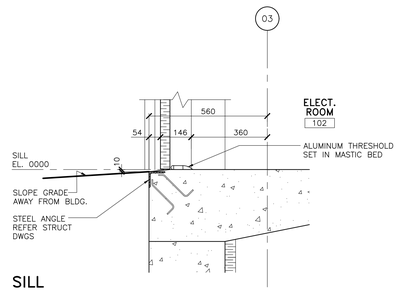

SILL

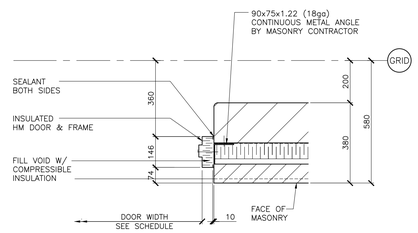

JAMB @ MASONRY TYPICAL

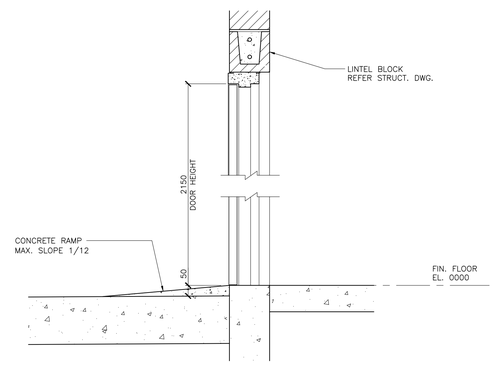

5 02-A45-00-01 DETAIL
SCALE 1:10

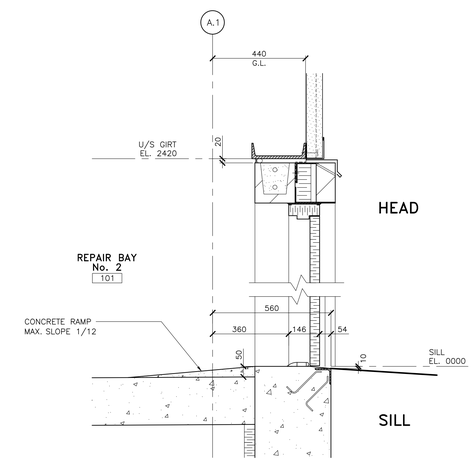

6 02-A45-00-01 DETAIL
SCALE 1:10

FOR TYPICAL NOTES REFER TO DETAIL 2 / 02-A45-00-01

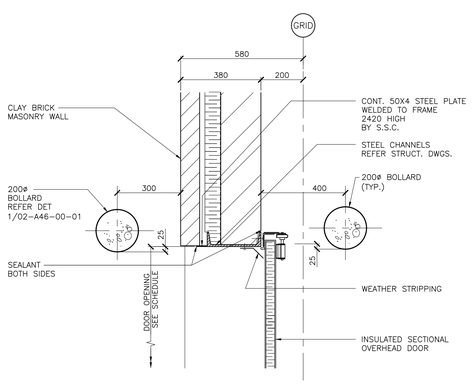

JAMB @ MASONRY

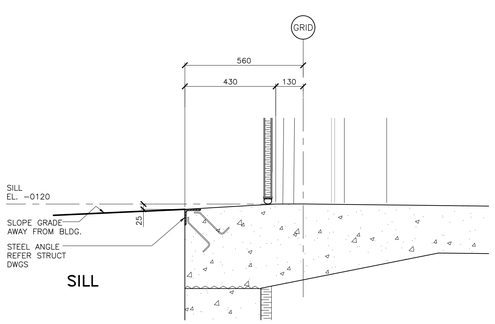

1 TYPICAL SECTIONAL OVERHEAD DOOR
SCALE 1:10

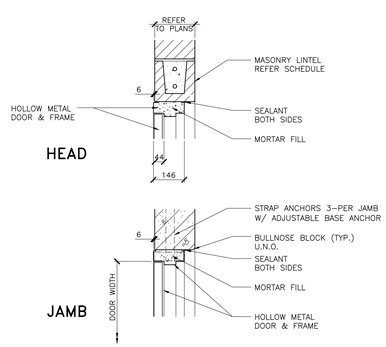

3 TYPICAL PERSONNEL DOOR
SCALE 1:10

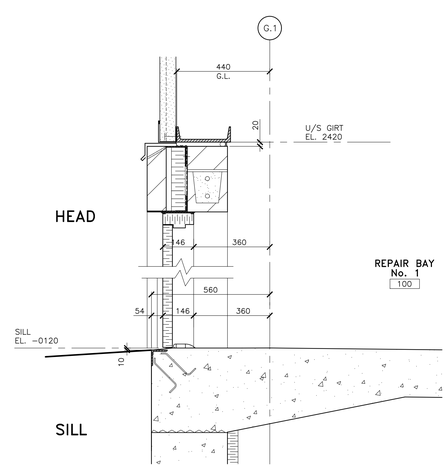

7 02-A45-00-01 PERSONNEL DOOR
SCALE 1:10

FOR TYPICAL NOTES REFER TO DETAIL 2 / 02-A45-00-01

ROD Contract No.
T-1038-2019

DATE (mmm dd yyyy)	ISSUED FOR	REV
OCT 01 2018	TENDER	0

KEY PLAN

CONSULTANTS

IBI GROUP
100-175 Galaxy Boulevard
Toronto ON M9W 0C9 Canada
tel 416 679 1930 fax 416 675 4620
ibigroup.com

This drawing has been prepared solely for the use of the Regional Municipality of Durham and there are no representations of any kind made by IBI Group to any party with whom IBI Group has not entered into a contract

ONTARIO ASSOCIATION OF ARCHITECTS
ANTHONY VAN VEEN
LICENCE
3739
Mar 18/19

North Arrow

Detail Symbol
DETAIL NUMBER
LOCATION OR DETAIL SHEET

Project Manager	Architect/Engineer
A. VAN VEEN	A.V.V. / S.K.
Project Leader	Drawn
R.K. / R.F.	M.F. / D.V.
Date	Checked
NOV 2012	L. BANDIERA

Client
THE REGIONAL MUNICIPALITY OF DURHAM
WORKS DEPARTMENT
WHITBY ONTARIO

Project
EXPAND GARAGE
SCUGOG DEPOT
10 REGIONAL RD. 21, R.R.#14, PORT PERRY

Drawing Title
DOOR DETAILS

Check Scale (may be photo-reduced)
0 1 Inch 0 10mm

Project No.	Drawing No.
24RX12.0113	02-A45-00-01

User Name: Joseph Patoi Plot Date\Time: Monday, March 18, 2019 2:44:30 PM Path and File Name: j:\24rx12.0113_durham region orono & scugog depots\5.9 drawing\59arch\layouts\02-a45-00-01.dwg

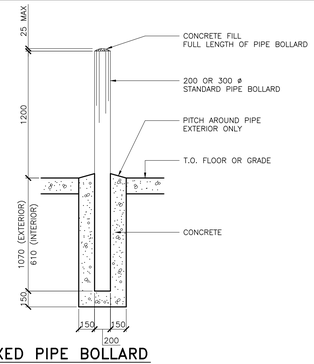

1 TYPICAL

FIXED PIPE BOLLARD

SCALE 1:20

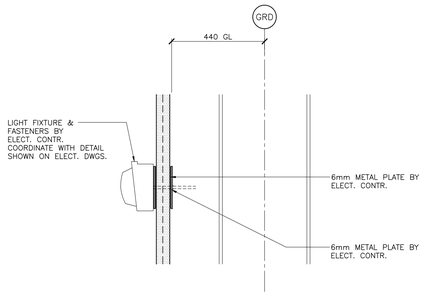

5 TYPICAL

EXTERIOR LIGHT FIXTURE AT SIDING – SECTION

SCALE 1:10

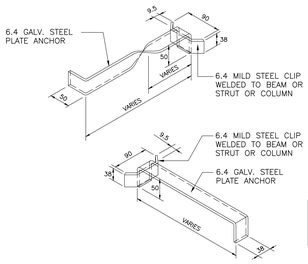

LOCATE ANCHORS:
HORIZONTALLY – 2000 O.C.
TYP. (EXCEPT AS NOTED)
VERTICALLY – 400 O.C.

2 TYPICAL

TYPICAL MASONRY ANCHOR DETAIL

SCALE 1:10

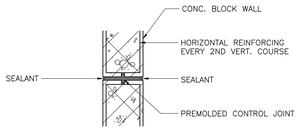

3 TYPICAL

TYPICAL CONC. BLOCK CONTROL JOINT DETAIL

SCALE 1:10

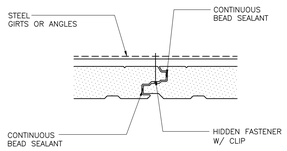

4 TYPICAL

TYPICAL METAL WALL PANEL DETAIL

SCALE 1:5

ROD Contract No.
T-1038-2019

DATE (mmm dd yyyy)	ISSUED FOR	REV
OCT 01 2018	TENDER	0

KEY PLAN

CONSULTANTS

IBI GROUP
100-175 Galaxy Boulevard
Toronto ON M9W 0C9 Canada
tel 416 679 1930 fax 416 675 4620
ibigroup.com

This drawing has been prepared solely for the use of the Regional Municipality of Durham and there are no representations of any kind made by IBI Group to any party with whom IBI Group has not entered into a contract

ONTARIO ASSOCIATION OF ARCHITECTS
ANTHONY VAN VEEN
LICENCE
Mar 18/19

North Arrow

Detail Symbol

DETAIL NUMBER
LOCATION OR DETAIL SHEET

Project Manager	Architect/Engineer
A. VAN VEEN	A.V.V. / S.K.
Project Leader	Drawn
R.K. / R.F.	M.F. / D.V.
Date	Checked
NOV 2012	L. BANDIERA

Client
THE REGIONAL MUNICIPALITY OF DURHAM
WORKS DEPARTMENT
WHITBY ONTARIO

Project
EXPAND GARAGE
SCUGOG DEPOT
10 REGIONAL RD. 21, R.R.#14, PORT PERRY

Drawing Title
MISCELLANEOUS DETAILS

Check Scale (may be photo-reduced)
0 1 Inch 0 10mm

Project No.	Drawing No.
24RX12.0113	02-A46-00-01

User Name: Joseph Potoi Plot Date\Time: Monday, March 18, 2019 2:44:47 PM Path and File Name: j:\24rx12.0113_durham region arono & scugog depots\5.9 drawing\59arch\layouts\02-a46-00-01.dwg

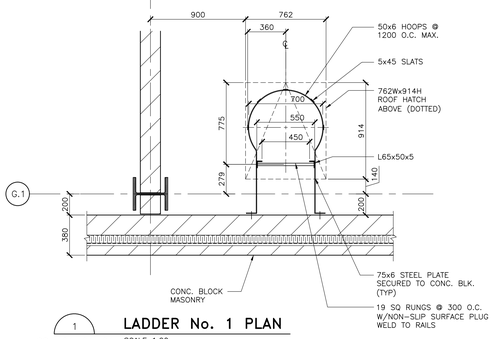

1 / 02-A21-01-01 **LADDER No. 1 PLAN** SCALE 1:20

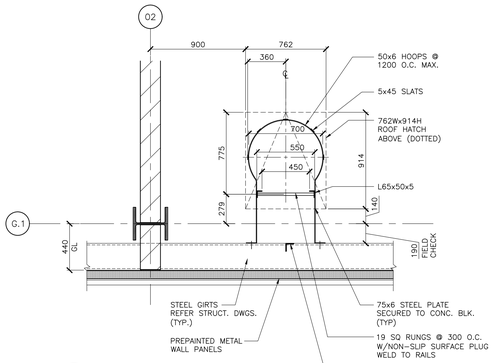

2 / 02-A83-00-01 **LADDER No. 1 PLAN** SCALE 1:20

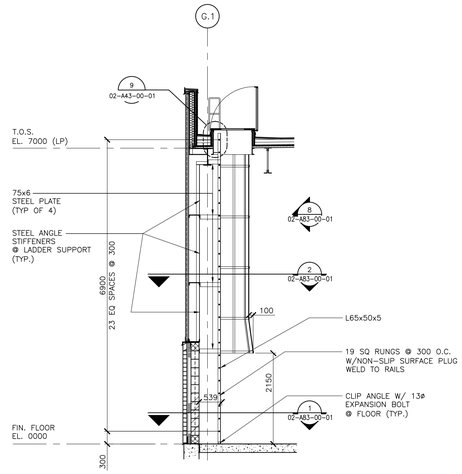

3 / 02-A83-00-01 **LADDER No. 1 SECTION** SCALE 1:50

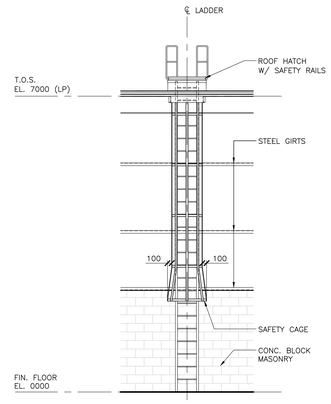

8 / 02-A83-00-01 **LADDER No. 1 ELEVATION** SCALE 1:50

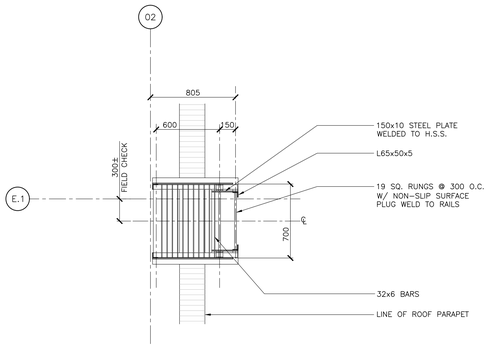

4 / 02-A23-00-01 **LADDER No. 2 PLAN** SCALE 1:20

NOTE: ALL STEEL WORK FOR EXTERIOR LADDER TO BE HOT DIPPED GALVANIZED

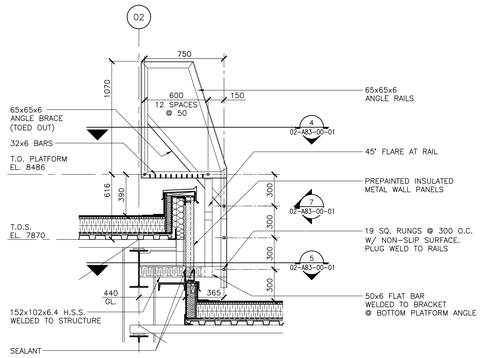

6 / 02-A83-00-01 **LADDER No. 2 SECTION** SCALE 1:20

NOTE: ALL STEEL WORK FOR EXTERIOR LADDER TO BE HOT DIPPED GALVANIZED

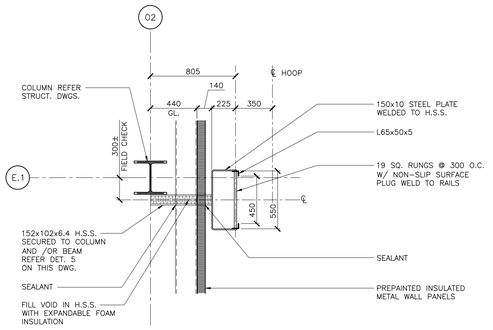

5 / 02-A83-00-01 **LADDER No. 2 PLAN** SCALE 1:20

NOTE: ALL STEEL WORK FOR EXTERIOR LADDER TO BE HOT DIPPED GALVANIZED

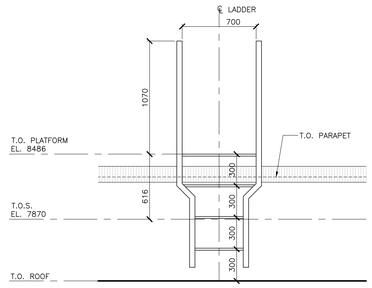

7 / 02-A83-00-01 **LADDER No. 2 ELEVATION** SCALE 1:20

ROD Contract No.
T-1038-2019

DATE (mmm dd yyyy)	ISSUED FOR	REV
OCT 01 2018	TENDER	0

KEY PLAN

CONSULTANTS

IBI GROUP
100-175 Galaxy Boulevard
Toronto ON M9W 0C9 Canada
tel 416 679 1930 fax 416 675 4620
ibigroup.com

This drawing has been prepared solely for the use of the Regional Municipality of Durham and there are no representations of any kind made by IBI Group to any party with whom IBI Group has not entered into a contract

ONTARIO ASSOCIATION OF ARCHITECTS
ANTHONY VAN VEEN
LICENCE
TITLE

North Arrow: True North

Detail Symbol: DETAIL NUMBER / LOCATION OR DETAIL SHEET

Project Manager	Architect/Engineer
A. VAN VEEN	A.V.V. / S.K.
Project Leader	Drawn
R.K. / R.F.	D.V.
Date	Checked
JUL 2012	L. BANDIERA

Client
THE REGIONAL MUNICIPALITY OF DURHAM
WORKS DEPARTMENT
WHITBY ONTARIO

Project
EXPAND GARAGE
SCUGOG DEPOT
10 REGIONAL RD. 21, R.R.#14, PORT PERRY

Drawing Title
LADDER DETAILS

Check Scale (may be photo-reduced)
0 1 Inch 0 10mm

Project No.	Drawing No.
24RX12.0113	02-A83-00-01

User Name: Joseph Potoi Plot Date\Time: Monday, March 18, 2019 2:45:01 PM Path and File Name: j:\24rx12.0113_durham region arena & scugog depots\5.9 drawing\59arch\layouts\02-a83-00-01.dwg

ROOM FINISH SCHEDULE

ROOM		FLOOR		BASE		WALLS								CEILING			REMARKS
						NORTH		SOUTH		EAST		WEST					
NUMBER	NAME	MAT.	FIN.	MAT.	FIN.	MAT.	FIN.	MAT.	FIN.	MAT.	FIN.	MAT.	FIN.	MAT.	FIN.	HEIGHT	
FIRST FLOOR PLAN – REFER TO DRAWING 02-A21-01-01																	
100	REPAIR BAY No. 1	CONC	EP/FL/C	CONC/BLK	–	PF CONC/BLK	– PT	PF CONC/BLK	– PT	CONC/BLK	PT	PF CONC/BLK	– PT	EXP/CONST	PT	7900±	
101	REPAIR BAY No. 2	CONC	EP/FL/C	CONC/BLK	–	PF CONC/BLK	– PT	PF CONC/BLK	– PT	PF CONC/BLK	– PT	CONC/BLK	PT	EXP/CONST	PT	7100±	EXISTING EAST WALL. SEE NOTE 8
102	ELECTRICAL ROOM	CONC	EP/FL/C	CONC/BLK	–	PF CONC/BLK	– PT	CONC/BLK	PT	CONC/BLK	PT	PF CONC/BLK	– PT	EXP/CONST	PT	3700±	
103	IT/ SECURITY ROOM	CONC	EP/FL/C	CONC/BLK	–	PF CONC/BLK	– PT	CONC/BLK	PT	PF CONC/BLK	– PT	CONC/BLK	PT	EXP/CONST	PT	3700±	

DOOR SCHEDULE

DOOR NUMBER	TYPE	SIZE	DOOR			FRAME			THRESHOLD	FIRE RATING	SECURITY CONTROLLED		HARDWARE GROUP NUMBER	REMARKS
			MAT.	FIN.	GLASS	MAT.	FIN.	DETAIL						
FIRST FLOOR PLAN – REFER TO DRAWING 02-A21-01-01														
100	B	1	HM	PT	D/GL	HM	PT	7	ALUM		EDS		1	HM FRAME HEAD 100MM. SEE NOTE 6
100A	E	2	MET	PF	D/GL	ST	PT	1					–	EDO. SEE NOTE 1
101	E	2	MET	PF	D/GL	ST	PT	1					–	EDO. SEE NOTE 1
101A	B	1	HM	PT	D/GL	HM	PT	6	ALUM		EDS		1	
102	A	1	HM	PT	–	HM	PT	2	ALUM		EDS		1	
102A	A	1	HM	PT	–	HM	PT	3		3/4 HR			6	
103	A	1	HM	PT	–	HM	PT	5		3/4 HR			6	
E100			EXISTING	DOOR	ASSEMBLY									EDO. SEE NOTE 5
E101			EXISTING	DOOR	ASSEMBLY									EDO. SEE NOTE 5
E102			EXISTING	DOOR	ASSEMBLY									EDO. SEE NOTE 5
E103			EXISTING	DOOR	ASSEMBLY									EDO. SEE NOTE 5
E104			EXISTING	DOOR	ASSEMBLY									EDO. SEE NOTE 5

DOOR TYPES

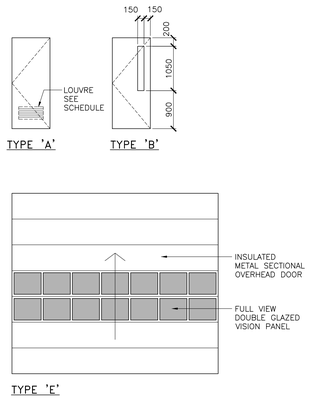

GENERAL ROOM FINISH NOTES:

1. PAINT ALL EXPOSED STEEL WORK INCLUDING GIRTS, SAG RODS AND CROSS BRACING.
2. PAINT ALL EXPOSED CONCRETE BLOCK PARTITIONS.
3. PAINT ALL EXPOSED GYPSUM BOARD PARTITIONS.
4. WHERE NO BASE IS APPLIED PAINT ALL WALLS DOWN TO FLOOR LINE & CUT STRAIGHT LINE @ TRANSITION.
5. ROOF LADDER TO BE PAINTED.
6. PAINT EXTERIOR ROOF HATCH.
7. REFER CONC. FLOOR SLAB DWGS AND CONC. SPECIFICATIONS FOR ADDITIONAL FLOOR FINISHES.
8. OUTSIDE FACE OF EXIST. WEST WALL, COLUMN LINE 1, TO RECEIVE NEW PAINT FINISH. CLEAN, REPAIR, PATCH & COVER ALL HOLES AND MAKE GOOD AS PER PAINT MANUFACTURERS RECOMMENDATIONS. REFER SPECIFICATIONS FOR ADDITIONAL NOTES.
9. PAINT ALL EXPOSED METAL DECK, AND SUPPORTING STRUCTURE.

ABBREVIATIONS

ACST	ACOUSTIC	MET	METAL
ALUM	ALUMINUM	MGP	MOVABLE GYPSUM PARTITION
AN	ANODIZED	MH	METALLIC HARDENER
AR/EP/FL	ACID RESISTANT EPOXY FLOOR	MO	MANUALLY OPERATED
AT	ACOUSTIC TILE	MP	METAL PARTITION
BLK	BLOCK	MSNRY	MASONRY
BRK	BRICK	NMH	NON-METALLIC HARDENER
CARP	CARPET	OGL	OBSCURE GLASS
CER	CERAMIC	P/CON	PRECAST CONCRETE
CER/T	CERAMIC TILE	P/CONC/BLK	PREFACED CONCRETE BLOCK
CFG	CLEAR FLOAT GLASS	P/GL	PLASTIC GLAZING
CHKD/PL	CHECKERED PLATE	P/LAM	PLASTIC LAMINATED
CJ	CONTROL JOINT	PF	PREFINISHED
CKBD	CORK BOARD	POL/WGL	POLISHED WIRED GLASS
CONC	CONCRETE	POLY	POLYESTER
CONC/BLK	CONCRETE BLOCK	POR/T	PORCELAIN TILE
D/GL	DOUBLE GLAZED	PT	PAINT
DGP	DEMOUNTABLE GYPSUM PARTITION	QT	QUARRY TILE
		RD	ROOF DRAIN
DP	DOOR CONTROL PANEL	RUB	RUBBER
EDO	ELECTRIC DOOR OPERATOR	RWL	RAIN WATER LEADER
EDS	ELECTRIC DOOR STRIKE	SF	SHEET FLOORING
EF	EXHAUST FAN	S/FPRF	SPRAYED FIREPROOFING
EP/FL	EPOXY FLOOR	S/Q/FL	SEAMLESS QUARTZ FLOORING
EP/FL/C	EPOXY FLOOR COATING	S/ST	STAINLESS STEEL
EP/PT	EPOXY PAINT	SIM	SIMILAR
EP/PT/1	EPOXY PAINT 1	SP/C	SPECIAL FLOORING
EXIST	EXISTING	ST	STEEL
EXP/CONST	EXPOSED CONSTRUCTION	STN	STONE
FAB	FABRIC	STRUCT/ST	STRUCTURAL STEEL
FD	FIRE DOOR	TER	TERRAZZO
FUS/L	FUSIBLE LINK	T.O.	TOP OF
GALV	GALVANIZED	T.O.S.	TOP OF STEEL
GB	GYPSUM BOARD	TSGL	TEMPERED SAFETY GLASS
GL	GLASS	UR/FL/C	URETHANE FLOOR COATING
GL/C	GLAZED COATING	V	VINYL
GRTG	GRATING	VCT	VINYL COMPOSITE TILE
GYP	GYPSUM	VF	VINYL FABRIC
HM	HOLLOW METAL	VP	VINYL PLANKS
HP	HIGH POINT	VT	VINYL TILES
HR	HOUR	VS	VINYL STUCCO
LAM	LAMINATED	WD	WOOD
LAM/SGL	LAMINATED SAFETY GLASS	WM	WIRE MESH
LIQ/S	LIQUID SEALER	WMP	WIRE MESH PARTITION
LP	LOW POINT	WPGL	WIRED PLASTIC GLAZING
LSR	LIQUID SILICONE RUBBER		

ALL DETAILS ARE LOCATED ON DRAWING 02-A45-00-01 UNLESS NOTED OTHERWISE.

NO.	WIDTH	HEIGHT	THK.
2	4880	4270	
1	1000	2150	45

DOOR OPENING SIZES

GENERAL DOOR NOTES:

1. CONTROL PANEL W/ PUSH BUTTON CONTROL INTERIOR SIDE ONLY.
2. ACTIVATED BY CARD READER.
3. EDS DENOTES ELECTRIC DOOR STRIKE.
4. HARDWARE GROUP REFER SPECIFICATIONS
5. EXISTING SECTIONAL DOORS MANUAL OPERATION. PROVIDE MOTOR CONTROL WITH PUSH BUTTON INTERIOR & SENSORS. FIELD CHECK MOTOR & PUSH BUTTON LOCATION.
6. HM FRAME HEAD SHALL BE 100MM FIELD CHECK BEFORE FABRICATION. RE: SLOPE IN FINISH FLOOR

ROD Contract No.
T-1038-2019

DATE (mmm dd yyyy)	ISSUED FOR	REV
OCT 01 2018	TENDER	0

KEY PLAN

CONSULTANTS

IBI GROUP
100-175 Galaxy Boulevard
Toronto ON M9W 0C9 Canada
tel 416 679 1930 fax 416 675 4620
ibigroup.com

This drawing has been prepared solely for the use of the Regional Municipality of Durham and there are no representations of any kind made by IBI Group to any party with whom IBI Group has not entered into a contract

ONTARIO ASSOCIATION OF ARCHITECTS
ANTHONY VAN VEEN
LICENCE
SEAL

North Arrow

Detail Symbol

DETAIL NUMBER
LOCATION OR DETAIL SHEET

Project Manager	Architect/Engineer
A. VAN VEEN	A.V.V. / S.K.
Project Leader	Drawn
R.K. / R.F.	D.V.
Date	Checked
JAN 2013	L. BANDIERA

Client
THE REGIONAL MUNICIPALITY OF DURHAM
WORKS DEPARTMENT
WHITBY ONTARIO

Project
EXPAND GARAGE
SCUGOG DEPOT
10 REGIONAL RD. 21, R.R.#14, PORT PERRY

Drawing Title
ROOM AND DOOR SCHEDULE

Check Scale (may be photo-reduced)
0 1 Inch 0 10mm

Project No.	Drawing No.
24RX12.0113	02-A90-00-01

User Name: Joseph Potoi Plot Date\Time: Monday, March 18, 2019 2:45:11 PM Path and File Name: j:\24rx12.0113_durham region arena & scugog depots\5.9 drawing\59arch\layouts\02-a90-00-01.dwg