LEGEND

SYMBOL	DESCRIPTION
FOS	FUEL OIL SUPPLY
FOR	FUEL OIL RETURN
	VENT LINE
	SUPPLY DUCT
	RETURN/EXHAUST DUCT
	CEILING DIFFUSER
	RETURN AIR GRILLE
	FLEXIBLE CONNECTION
MD	MOTORIZED DAMPER
	SILENCER
F/D	FIRE DAMPER

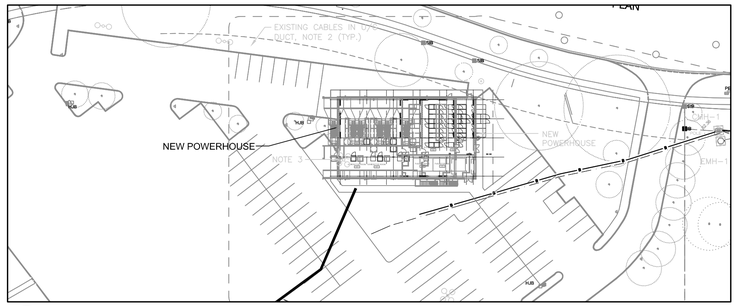

1 M-001 NEW POWER HOUSE
1 : 600

GENERAL NOTES:

1. THE BASIS OF DESIGN FOR THIS PROJECT IS THREE 1.36 MW CAT 3512C GENERATORS. CONTRACTOR SHALL MAKE THE NECESSARY ALLOWANCES FOR DIFFERENCES THAT MAY EXIST BETWEEN DIFFERENT GENERATOR MANUFACTURERS IN TERMS OF (BUT NOT LIMITED TO): WEIGHT, DIMENSIONS, SETUP, AIR FLOW, NOISE ATTENUATION, EXHAUST/VENTING, CONTROLS, ETC.
2. CONTRACTOR SHALL TAKE THE NECESSARY FIELD MEASUREMENTS PRIOR TO SUBMITTING SHOP DRAWINGS AND PROCURING EQUIPMENT.
3. COORDINATE WITH OTHER TRADES IN ALL MATTERS RELATED TO THE PLANNING, PROCUREMENT AND EXECUTION OF THE MECHANICAL WORK.
4. REFER TO ARCHITECTURAL, STRUCTURAL AND ELECTRICAL DRAWINGS FOR ADDITIONAL DETAILS AND COORDINATION.
5. MECHANICAL SYSTEMS SHALL BE TESTED AND COMMISSIONED PRIOR TO CLAIM FOR SUBSTANTIAL COMPLETION. THIS INCLUDES PROVIDING ALL DOCUMENTATION TO CONSULTANT AND RECEIVING APPROVAL OF THE SAME INCLUDING APPROVALS BY TSSA.
6. ENGAGE OEM MANUFACTURER FOR START UP OF FUEL SYSTEM INCLUDING BUT NOT LIMITED TO: TANKS, PUMPS, FUEL POLISHER AND FUEL MANAGEMENT SYSTEM.
7. COORDINATE, OBTAIN AND PAY FOR ALL TSSA INSPECTIONS VARIANCES AND APPROVALS.
8. RETAIN 02E ENVIRONMENTAL INC. AT COMPLETION OF PROJECT TO CONDUCT A POST INSTALLATION NOISE AUDIT TO CONFIRM NOISE ATTENUATION AT CRITICAL RECEPTORS IS ACCEPTABLE. CONTACT JAKUB WROBEL j.wrobel@o2e.co OR 519.633.2400.
9. THE FIBRE OPTIC CABLE IS BEING INSTALLED BY OTHERS IN A DUCT BANK FROM THE NEW POWER HOUSE TO THE HOSPITAL ELECTRICAL/TELEPHONE ROOM IN BUILDING 1/2. REFER TO DRAWING M–704 & M–705 FOR CONDUIT ROUTING FROM ELECTRICAL ROOM TO BAS PANEL INSIDE THE HOSPITAL.
10. UNLESS NOTED OTHERWISE THE TERM 'BY OTHERS' ON THESE DRAWINGS MEAN SOMEONE ELSE OTHER THAN THE MECHANICAL CONTRACTOR BUT IT'S STILL THE RESPONSIBILITY OF THE GENERAL CONTRACTOR TO PROVIDE AS DESCRIBED TO THE PROJECT. MECHANICAL CONTRACTOR TO COORDINATE WITH THE GENERAL CONTRACTOR FOR THE PROVISION OF EQUIPMENT AND DEVICES.
11. PROVIDE WALL OPENINGS AND SLEEVES AS REQUIRED FOR MECHANICAL EQUIPMENT AND PIPING. PATCH WALLS AND MAKE GOOD.

DRAWING LIST

DWG. NO.	DESCRIPTION
M–001	DRAWING LIST, LEGEND, SITE LOCATION AND SITE PLAN
M–100	SCHEDULES
M–300	HVAC WORK
M–301	ROOF – NEW WORK
M–302	SECTIONS AND ELEVATIONS
M–400	GENERATOR ROOM – FUEL PIPE LAYOUT
M–500	FIRE PROTECTION – FIRE EXTINGUISHERS
M–700	CONTROLS EQUIPMENT LAYOUT
M–701	CONTROLS
M–702	GENERATOR ROOM VENTILATION SCHEMATICS
M–703	FUEL SYSTEM SCHEMATICS
M–704	BUILDING 1 LEVEL 1 – MECHANICAL
M–705	BUILDING 1 LEVEL 2 – MECHANICAL
M–900	STANDARD DETAILS
M–901	STANDARD DETAILS
M–902	STANDARD DETAILS
M–903	STANDARD DETAILS

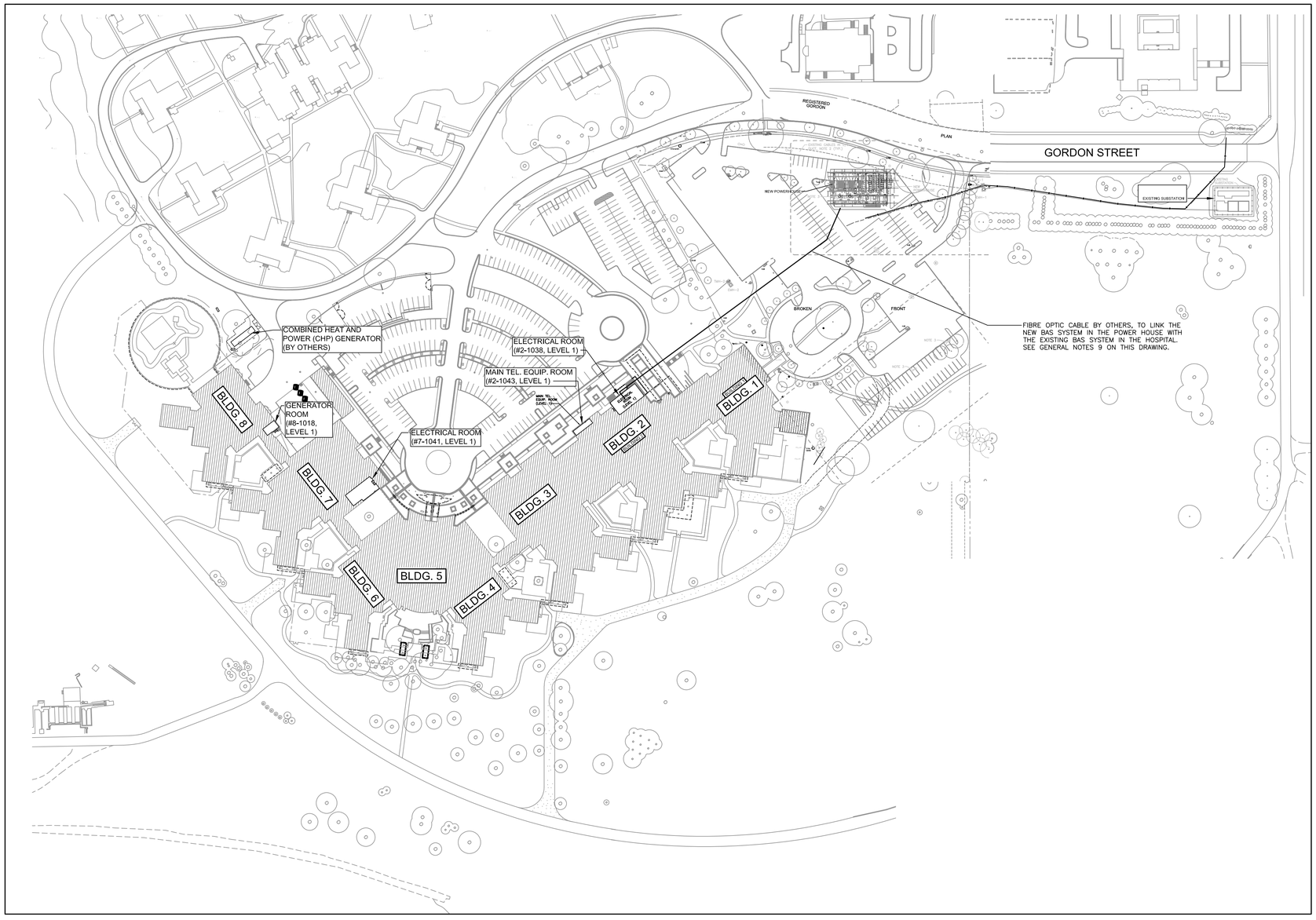

2 M-001 SITE PLAN
1 : 600

Key Plan:

Consultant:

MORRISON HERSHFIELD

Suite 300, 125 Commerce Valley Drive W.
Markham, ON L3T 7W4
Tel: (416) 499–3110 Fax: (416) 499–9658

Seal:

NORTH

REV	DESCRIPTION	DATE	BY
4	ISSUED FOR TENDER	JUN 13/19	GF
3	ISSUED FOR BUILDING PERMIT	JUN 3/ 19	GF
1	ISSUED FOR 100% REVIW	APR. 26/19	GF
A	ISSUED FOR CLIENT REVIEW	DEC 13/18	GF

DO NOT SCALE DRAWINGS. CONTRACTOR MUST VERIFY ALL DIMENSIONS AND ADVISE CONSULTANTS OF ANY ERRORS OR OMISSIONS. NO VARIATIONS OR MODIFICATIONS TO WORK SHOWN SHALL BE IMPLEMENTED WITHOUT PRIOR WRITTEN APPROVAL. ALL PREVIOUS ISSUES OF THIS DRAWING ARE SUPERSEDED BY THE LATEST REVISION. ALL DRAWINGS AND SPECIFICATIONS REMAIN THE PROPERTY OF MORRISON HERSHFIELD LIMITED.

Client:

Ontario Shores
Centre for Mental Health Sciences

Project:

NEW POWERHOUSE

700 GORDON STREET, WHITBY, ON L1N 5S9

Sheet Title:

DRAWING LIST, LEGEND, SITE LOCATION & SITE PLAN

Drawn By:	N.P.	Date:	08/20/18
Designed By:	G.F.	Checked By:	G.F.
Scale:	N.T.S.	File Path:	IBM 360:MH - 1802218 - Ontario Shores PowerHouse:1802218-Ontario Shores PowerhouseRVT2019-ARCH.rvt
Project No:	1802218	Drawing No:	M-001

MOTORIZED DAMPERS SCHEDULE

SYMBOL	SYSTEM	SIZE (ft.)	DAMPER QTY.	MANUFACTURER	ACTUATORS
VMD 1, 2 & 3	VENTILATION/COMBUSTION AIR DG-1, 2, 3	16'x16'	3	TAMCO 9000BF	BELIMO NORMALLY OPEN-SPRING OPEN, POWER TO CLOSE WITH AUXILIARY SWITCH
EMD 1, 2 & 3	EXHAUST AIR DG-1, 2, 3	14'x14'	3	TAMCO 9000BF	BELIMO NORMALLY OPEN (MODULATING WITH AUXILIARY SWITCH)
RMD-A & B 1, 2 & 3	RECIRCULATION AIR DG-1, 2, 3	4.5'x4.5'	9	TAMCO 9000BF	BELIMO NORMALLY CLOSED (MODULATING WITH AUXILIARY SWITCH) SEE NOTE 3
EFMD 1, 2 & 3	EXHAUST FAN EF-1, 2, 3	4'x2'	3	TAMCO 9000BF	BELIMO NORMALLY OPEN
EFMD 4, 5	INTAKE & EXH. FAN EF-4	3'x2'	2	TAMCO 9000BF	BELIMO NORMALLY OPEN
EFMD 6	EXHAUST FAN EF-5	1.5'x1.5'	1	TAMCO 9000BF	BELIMO NORMALLY OPEN
EFMD 7	INTAKE EF-5	2'x2'	1	TAMCO 9000BF	BELIMO NORMALLY OPEN

NOTES:

1. THE DAMPERS SHALL BE SUPPLIED & INSTALLED BY THE MECHANICAL CONTRACTOR. DAMPER ACTUATORS & CONTROL WIRING SHALL BE PROVIDED BY CONTROLS CONTRACTOR.
2. ALL DAMPERS WITHOUT EXCEPTION SHALL BE THERMALLY INSULATED DAMPER WITH THERMALLY BROKEN FRAMES.
3. RECIRCULATION MOTORIZED DAMPER RMD-A IS SITUATED AT THE TOP AND RIGHT-HAND SIDE OF PLENUM. (TYP. OF 6) RMD-B IS A DOOR DAMPER ON HINGES THAT ALLOW ACCESS TO THE PLENUM. (TYP. OF 3).
4. FIELD MEASURE AND COORDINATE WITH OTHER TRADES PRIOR TO SUBMITTING SHOP DRAWINGS.

SILENCER SCHEDULE

NO.	QUANTITY	WEIGHT Kg (lbs)	SERVICE	PERFORMANCE DATA										CONSTRUCTION	REMARKS
				CAPACITY l/s (CFM)	PRESS. DROP Pa (inch WC)	MINIMUM INSERTION LOSS VALUES (dB)								W x H x L mm (ft)	
						63	125	250	500	1000	2000	4000	8000		
SL-1 to SL-3	3	(6720)	GEN. RM. INTAKE	27,358 (58,000)	(0.06)	17	26	42	55	55	55	50	32	4878x4878x1524 (16x16x5)	SEE NOTE 1, 3, 5
SL-4 to SL-6	3	(7084)	GEN. RM. EXH.	25,472 (54,000)	(0.1)	11	24	41	55	55	55	55	36	4268x4268x2134 (14x14x7)	SEE NOTE 1, 3, 5
SL-7 to SL-9	3	1230 (2709)	GEN. EXH. MUFFLER	4,875 (10,335)	(8)	20	45	50	45	35	30	30	30	10169x3810L (3.3øx12.5L)	SEE NOTE 2, 3, 4, 5
SL-10 to SL-12	3	154	GE. RM. EF-1, 2, 3	1,210 (2,566)	100	9	16	28	39	40	31	22	17	508x610x1524 (20x24x60)	SEE NOTE 1, 3, 5
SL-13	1	50	EL. RM. EF-4	810 (1,720)	100	4	6	11	18	18	15	15	9	508x356x914 (20x14x36)	SEE NOTE 1, 3, 5
SL-14	1	50	TANK RM. EF-5	315 (660)	100	4	6	11	18	18	15	15	9	508x356x914 (20x14x36)	SEE NOTE 1, 3, 5

NOTES:

1. EH PRICE SILENCERS ARE BASIS OF DESIGN, OTHERS MAY BE APPROVED AT THE SOLE DISCRETION OF THE OWNER.
2. SILEX SILENCERS ARE BASIS OF DESIGN, OTHERS MAY BE APPROVED AT THE SOLE DISCRETION OF THE OWNER. SUPER HOSPITAL PLUS, CYLINDRICAL SILENCER (MUFFLER), ULC LISTED.
3. PERFORMANCE, WEIGHTS AND DIMENSIONS MAY CHANGE FROM MANUFACTURER TO MANUFACTURER. MAKE THE NECESSARY ALLOWANCES TO ACCOUNT FOR THESE CHANGES INCLUDING BUT NOT LIMITED TO: PERFORMANCE, INSTALLATION, SUPPORTS, ETC.
4. BOTTOM IN, TOP OUT, 300mm (12"ø) FLANGE CONNECTIONS.
5. FIELD MEASURE AND COORDINATE WITH OTHER TRADES PRIOR TO SUBMITTING SHOP DRAWINGS.

FUEL FILTER SCHEDULE

DESIG.	DESCRIPTION	LOCATION	QUANTITY	MAKE	MODEL NO.	REMARKS
FF-1 TO FF-3	FUEL FILTER	AS SHOWN	3	RACOR	75/1000MAX-M-P-10	

NOTES:

1. FILTER C/W METAL BOWLS, WATER PROBE, PRESSURE GAUGE, BY-PASS VALVE AND ISOLATION VALVE FOR ONE ONE FILTER OPERATION WITH 10 MICRON CARTRIDGES.
2. WATER PROBE/ALARMS MONITORED BY VEEDER ROOT SYSTEM.

UNIT HEATER SCHEDULE

UNIT	LOCATION	MANUFACTURER	MODEL	OUTPUT		MOTOR		BLOWER		REMARKS
				kW	MBH	V/PH/Hz	HP	CFM	l/s	
UH-1	GEN. ROOM	OULLET	OAS03038	3	10.2	240/1/60	1/50	510	240	
UH-2	GEN. ROOM	OULLET	OAS03038	3	10.2	240/1/60	1/50	510	240	
UH-3	GEN. ROOM	OULLET	OAS03038	3	10.2	240/1/60	1/50	510	240	
UH-4	GEN. ROOM	OULLET	OAS03038	3	10.2	240/1/60	1/50	510	240	
UH-5	ELEC. ROOM	OULLET	OAS03038	3	10.2	240/1/60	1/50	510	240	
UH-6	ELEC. ROOM	OULLET	OAS03038	3	10.2	240/1/60	1/50	510	240	
UH-7	TANK ROOM	OULLET	OAS02038	2	6.8	240/1/60	1/50	510	240	
UH-8	TANK ROOM	OULLET	OAS02038	2	6.8	240/1/60	1/50	510	240	

NOTES: 1. PROVIDE WALL MOUNTED THERMOSTATS UNLESS NOTED OTHERWISE.

FUEL MONITORING SYSTEM

TAG	MAKE	MODEL	DESIGNATION	V/PH/Hz	REMARKS
FM-1	VEEDER ROOT/INCON	–	TANK LEVEL & LEAK DETECTION	120/1/60	PROVIDE POWER AND CONTROL WIRING TO CONNECT TO BAS AND ALL FUEL SENSORS

NOTES: 1. PROVIDE CHIPKIN INTERFACE CARD FOR INTEGRATION WITH HONEYWELL BAS SYSTEM.

FUEL SENSOR SCHEDULE

DESIG.	DESCRIPTION	LOCATION	QUANTITY	MAKE	SUGGESTED MODEL NO.	REMARKS
FLD	FLOOR LEAK SENSOR	VARIOUS	8	VEEDER ROOT	794380-208	SENSORS TO BE ULC LISTED. SEE NOTE 2
PTD	PUMP TRAY LEAK SENSOR	GEN. ROOM	3	BY PUMP MFR.	–	SEE NOTE 3
CH-1	CRITICAL HIGH (DAY TANK)	GEN. ROOM	3	K-TECH	–	SEE NOTE 3
CH-2	CRITICAL HIGH (MAIN TANK)	TANK ROOM	1	K-TECH	–	SEE NOTE 2
HLF	5-LEVEL FLOAT (DAY TANK)	GEN. ROOM	3	K-TECH	–	SEE NOTE 3
CL	CONTINUOUS LEVEL SENSOR (MAIN TANK)	TANK ROOM	1	VEEDER ROOT	846391-307	SEE NOTE 2

NOTES:

1. ALL SENSORS SHALL BE CERTIFIED FOR INTENDED USE AS PER CSA B139-15 AND TSSA REQUIREMENTS, ULC AND/OR CSA LISTED.
2. WIRE SENSORS TO VEEDER ROOT CONSOLE.
3. WIRE SENSORS TO PUMP CONTROL PANEL.
4. BASIS OF DESIGN SENSORS SHOWN OTHERS MAY BE ACCEPTED AT SOLE DISCRETION OF OWNER.
5. PROVIDE POWER TO OVERFILL ALARM CONSOLE LOCATED OUTDOORS BY TANK FILL PIPE.

DAY TANK SCHEDULE

TAG	MANUFACTURER	PART NO.	LOCATION	CAPACITY (L)	QUANTITY	REMARKS
DT-1, DT-2 & DT-3	WESTEEL	–	GENERATOR ROOM	1100	3	TANK SHALL BE OBLONG DOUBLE WALL CONTAINMENT TANK, ULC S602 LISTED AND LEAK TESTED. VACUUM MONITORED TANK. PROVIDE ALL REQUIRED OPENINGS AS INDICATED. INSTALL AS PER MANUFACTURER RECOMMENDATION/INSTRUCTIONS AND AS PER AUTHORITIES HAVING JURISDICTION. OBTAIN ALL TSSA APPROVALS. TANK SHALL BE BLAST CLEANED WITH ONE COAT PRIMER AND FINISHED WITH ONE COAT WHITE ENAMEL. REFER TO SPECIFICATION 33 56 13 FOR FURTHER DETAILS.

FUEL TRANSFER PUMP SCHEDULE

TAG	LOCATION	MANUFACTURER	MODEL	SERVICE	QUANTITY	WEIGHT (KG)	FLOW (GPM)	HEAD (FT)	FLANGE SIZE IN. (mm)	MOTOR				REMARKS
										RPM	HP	FLA	VOLTAGE (V/ø/Hz)	
TP-1	GENERATOR ROOM	ALBANY PUMPS		FUEL OIL SUPPLY	1	–	6	40	1" (25)	1750	1	–	230/1/60	PACKAGE DUPLEX UNIT. 1" INLET/OUTLET, C/W BASKET STRAINER, BALL VALVES, PRESSURE GAUGES WITH 1/4" BALL VALVES, SPRING CHECK VALVE, IN-LINE RELIEF VALVES, FLOAT SWITCH FOR DRIP TRAY LEAK DETECTION AND DUAL STAGE PRESSURE SWITCH. ALSO C/W MANUFACTURERS CONTROL PANEL, NEMA 1 ENCLOSURE WITH H-O-A STARTERS, DISCONNECT, ALTERNATOR SWITCH. PROVIDE AUTO-FILL FUNCTION SO THAT DAY TANK ALWAYS TOPS UP EVEN IF GENERATOR SHUTS OFF DURING THE FILL CYCLE.
TP-2	GENERATOR ROOM	ALBANY PUMPS		FUEL OIL SUPPLY	1	–	6	40	1" (25)	1750	1	–	230/1/60	
TP-3	GENERATOR ROOM	ALBANY PUMPS		FUEL OIL SUPPLY	1	–	6	40	1" (25)	1750	1	–	230/1/60	

NOTES:

1. ALBANY PUMPS ARE BASIS OF DESIGN, VIKING PUMPS MAY BE ACCEPTED AT THE SOLE DISCRETION OF THE OWNER.
2. ALL COMPONENTS AND VALVES IN DUPLEX PUMP ASSEMBLY MUST BE ULC LISTED.
3. PROVIDE BACNET CARD FOR INTEGRATION WITH HONEYWELL BAS SYSTEM.

EXHAUST FAN SCHEDULE

No.	DESIGNATION	LOCATION	MANUFACTURER	MODEL	PERFORMANCE DATA			CONSTRUCTION DATA		SONES	MOTOR MIN. HP		STARTER POWER SOURCE		STARTER REMOTE ACCESSORIES		STARTER CONTROLS	BAS	REMARKS
					CAPACITY L/s	STATIC PRESSURE Pa	R.P.M.	TYPE	WHEEL DIA. mm (in)		1PH 120V	1PH 230V	E	N	DEVICE	LOC'N	SAFETY		
EF-1	GEN. ROOM EXHAUST FAN	GEN. ROOM	LAUREN COOK	150SQ17D	1210	50	1725	IN-LINE CENTRIFUGAL	380 (15)	25	–	1	–	•	DISC	LOCAL	OL	•	
EF-2	GEN. ROOM EXHAUST FAN	GEN. ROOM	LAUREN COOK	150SQ17D	1210	50	1725	IN-LINE CENTRIFUGAL	380 (15)	25	–	1	–	•	DISC	LOCAL	OL	•	
EF-3	GEN. ROOM EXHAUST FAN	GEN. ROOM	LAUREN COOK	150SQ17D	1210	50	1725	IN-LINE CENTRIFUGAL	380 (15)	25	–	1	–	•	DISC	LOCAL	OL	•	
EF-4	ELEC. ROOM EXHAUST FAN	ELEC. ROOM	LAUREN COOK	150SQ10D	810	50	1075	IN-LINE CENTRIFUGAL	380 (15)	11.5	1/3	–	–	•	DISC	LOCAL	OL	•	
EF-5	TANK ROOM EXHAUST FAN	TANK ROOM	LAUREN COOK	90SQ12D	315	50	1200	IN-LINE CENTRIFUGAL	230 (9)	7.0	1/6	–	–	•	DISC	LOCAL	OL	•	

NOTES:

1. ALL EXHAUST FANS ARE DIRECT DRIVE. PROVIDE ACCESSORIES: DISCONNECT SWITCHES, FLEX DUCT CONNECTOR, INLET/OUTLET COMPANION FLANGE, INLET/OUTLET SCREEN, INSULATED HOUSING, ALUMINUM CONSTRUCTION, SPRING ISOLATORS FOR CEILING MOUNT.
2. BAS SHALL MONITOR FAN RUN STATUS.
3. PROVIDE WALL MOUNTED THERMOSTATS UNLESS NOTED OTHERWISE.

ABOVE GROUND FUEL TANK SCHEDULE

TAG	MANUFACTURER	MODEL NO.	LOCATION	CAPACITY (L)	DIMENSIONS (mm)		QUANTITY	REMARKS
					TANK (ø)	TANK LENGTH		
T-1	STEEL CRAFT	TH7D045400W29X	TANK ROOM	45,000	9.6' (2921)	24' (7366)	1	DOUBLE WALL VACUUM MONITORED REFER TO SPECIFICATION 33 56 16 AND DWG. M-703 FOR DETAILS OF THE ABOVE GROUND FUEL TANK. PROVIDE ALL EQUIPMENT AND ACCESSORIES SPECIFIED. ULC S601 TANK

FITTINGS AND VALVE SCHEDULE

TAG	SIZE mm	QUANTITY	MANUFACTURER & MODEL	DESCRIPTION	LOCATION	REMARKS
FS-1	100	4	MORRISON BROS.	FIRE SAFE	GEN.	
SC-1	100	4	–	SPILL CONTAINMENT	VARIOUS	ULC/LISTED SPILL CONTAINMENT
PRV-1	100	4	FULFLO	PRESSURE RELIEF	VARIOUS	ULC/LISTED PRESSURE RELIEF SET TO 100 PSI
ASV-1	25	6	EBW	ANTI-SIPHON	MAIN & DAY TANK	ULC/LISTED PRESSURE RELIEF SET TO 100 PSI
SV-1	25	VARIOUS	JOMAR	SHUT-OFF OR ISOLATION BALL VALVE	VARIOUS	ULC/LISTED VALVES

NOTES: 1. ALL SENSORS TO BE CERTIFIED FOR INTENDED USE AS PER CSA B139-15 AND TSSA REQUIREMENTS.

FUEL POLISHER SCHEDULE

TAG	QTY.	DESIGNATION	LOCATION	DWG.	MANUFACTURER	FLOW RATE (USGPH)	REMARKS
FP-1	1	FUEL POLISHER FOR MAIN TANK	TANK RM.	M-400	ACM OR APPROVED EQUAL	10	PROVIDE 230/1/60 POWER FOR 3/4 PUMP MOTOR

NOTES: 1. PROVIDE BACNET CARD FOR INTEGRATION WITH HONEYWELL BAS SYSTEM.

Key Plan:

Consultant:

MORRISON HERSHFIELD

Suite 300, 125 Commerce Valley Drive W.
Markham, ON L3T 7W4
Tel: (416) 499-3110 Fax: (416) 499-9658

Seal:

REV	DESCRIPTION	DATE	BY
4	ISSUED FOR TENDER	JUN 13/19	GF
3	ISSUED FOR BUILDING PERMIT	JUN 3/ 19	GF
1	ISSUED FOR 100% REVIW	APR. 26/19	GF
A	ISSUED FOR CLIENT REVIEW	DEC 13/18	GF

DO NOT SCALE DRAWINGS. CONTRACTOR MUST VERIFY ALL DIMENSIONS AND ADVISE CONSULTANTS OF ANY ERRORS OR OMISSIONS. NO VARIATIONS OR MODIFICATIONS TO WORK SHOWN SHALL BE IMPLEMENTED WITHOUT PRIOR WRITTEN APPROVAL. ALL PREVIOUS ISSUES OF THIS DRAWING ARE SUPERSEDED BY THE LATEST REVISION. ALL DRAWINGS AND SPECIFICATIONS REMAIN THE PROPERTY OF MORRISON HERSHFIELD LIMITED.

Client:

Ontario Shores
Centre for Mental Health Sciences

Project:

NEW POWERHOUSE

700 GORDON STREET, WHITBY, ON L1N 5S9

Sheet Title:

SCHEDULES

Drawn By:	N.P.	Date:	08/20/18
Designed By:	G.F.	Checked By:	G.F.
Scale:	N.T.S.	File Path:	BIM 360:\Mh - 1802218 - Ontario Shores Powerhouse\1802218-Ontario Shores Powerhouse-RVT2018-ARCH.rvt
Project No:	1802218	Drawing No:	M-100

BIM 360:/Mh - 1802218 - Ontario Shores Powerhouse/1802218-Ontario Shores Powerhouse-RVT2018-ARCH.rvt
8/22/2018 1:00:07 AM

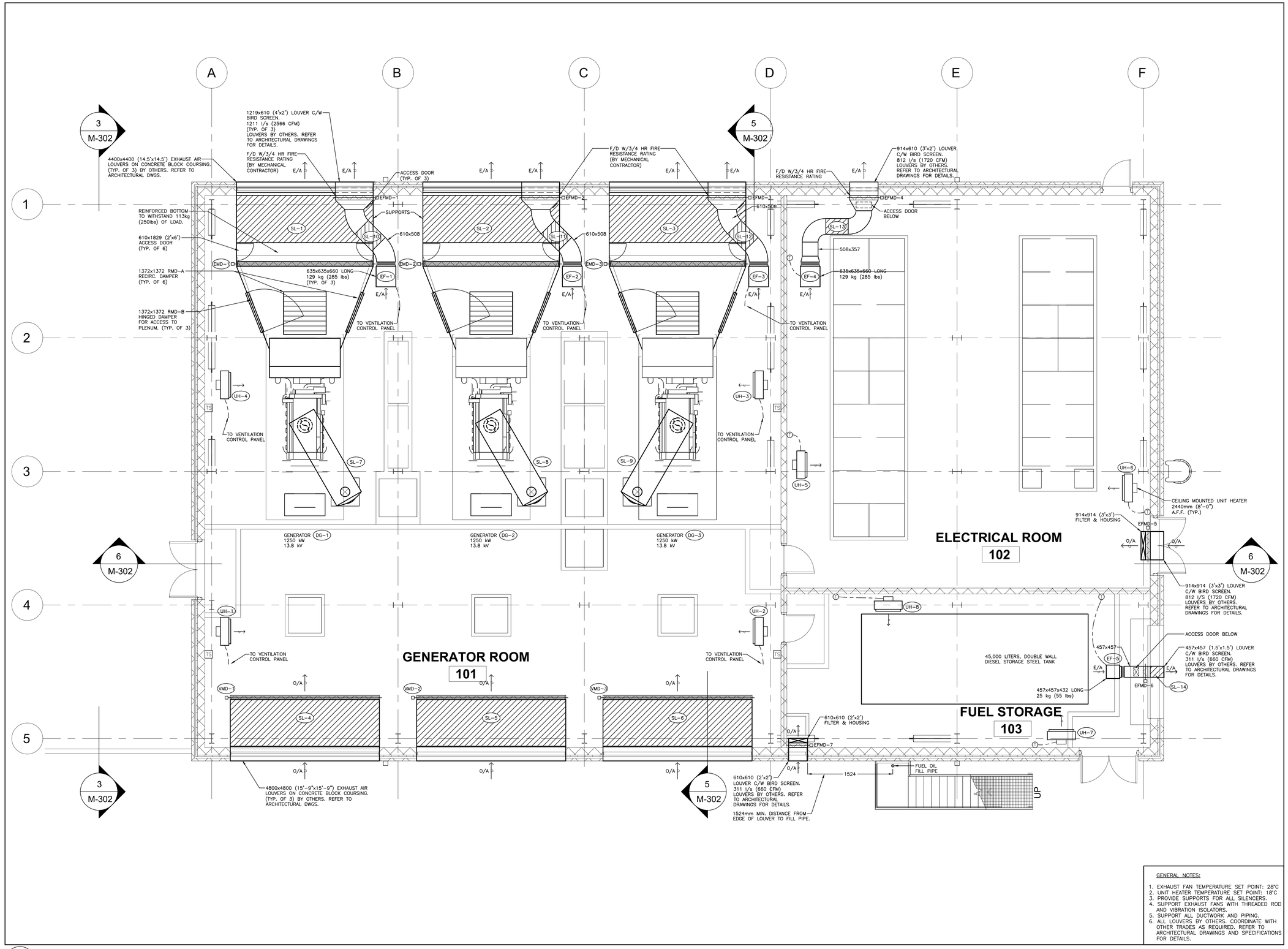

GENERAL NOTES:

1. EXHAUST FAN TEMPERATURE SET POINT: 28°C
2. UNIT HEATER TEMPERATURE SET POINT: 18°C
3. PROVIDE SUPPORTS FOR ALL SILENCERS.
4. SUPPORT EXHAUST FANS WITH THREADED ROD AND VIBRATION ISOLATORS.
5. SUPPORT ALL DUCTWORK AND PIPING.
6. ALL LOUVERS BY OTHERS. COORDINATE WITH OTHER TRADES AS REQUIRED. REFER TO ARCHITECTURAL DRAWINGS AND SPECIFICATIONS FOR DETAILS.

1 M-300 HVAC WORK
SCALE: 1:50

Key Plan:

Consultant:

MORRISON HERSHFIELD
Suite 300, 125 Commerce Valley Drive W.
Markham, ON L3T 7W4
Tel: (416) 499-3110 Fax: (416) 499-9658

Seal:

NORTH

REV	DESCRIPTION	DATE	BY
4	ISSUED FOR TENDER	JUN 13/19	GF
3	ISSUED FOR BUILDING PERMIT	JUN 3/ 19	GF
1	ISSUED FOR 100% REVIW	APR. 26/19	GF
A	ISSUED FOR CLIENT REVIEW	DEC 13/18	GF

DO NOT SCALE DRAWINGS. CONTRACTOR MUST VERIFY ALL DIMENSIONS AND ADVISE CONSULTANTS OF ANY ERRORS OR OMISSIONS. NO VARIATIONS OR MODIFICATIONS TO WORK SHOWN SHALL BE IMPLEMENTED WITHOUT PRIOR WRITTEN APPROVAL. ALL PREVIOUS ISSUES OF THIS DRAWING ARE SUPERSEDED BY THE LATEST REVISION. ALL DRAWINGS AND SPECIFICATIONS REMAIN THE PROPERTY OF MORRISON HERSHFIELD LIMITED.

Client:

Ontario Shores
Centre for Mental Health Sciences

Project:

NEW POWERHOUSE

700 GORDON STREET, WHITBY, ON L1N 5S9

Sheet Title:

HVAC WORK

Drawn By:	N.P.	Date:	08/20/18
Designed By:	G.F.	Checked By:	G.F.
Scale:	1:50	File Path:	BIM 360:\1MH - 1802218 - Ontario Shores Powerhouse\1802218-Ontario Shores Powerhouse-RVT2018-ARCH.rvt
Project No:	1802218	Drawing No:	M-300

BIM 360://MH - 1802218 - Ontario Shores Powerhouse/1802218-Ontario Shores Powerhouse-RVT2018-ARCH.rvt
07/22/2018 11:07:37 AM

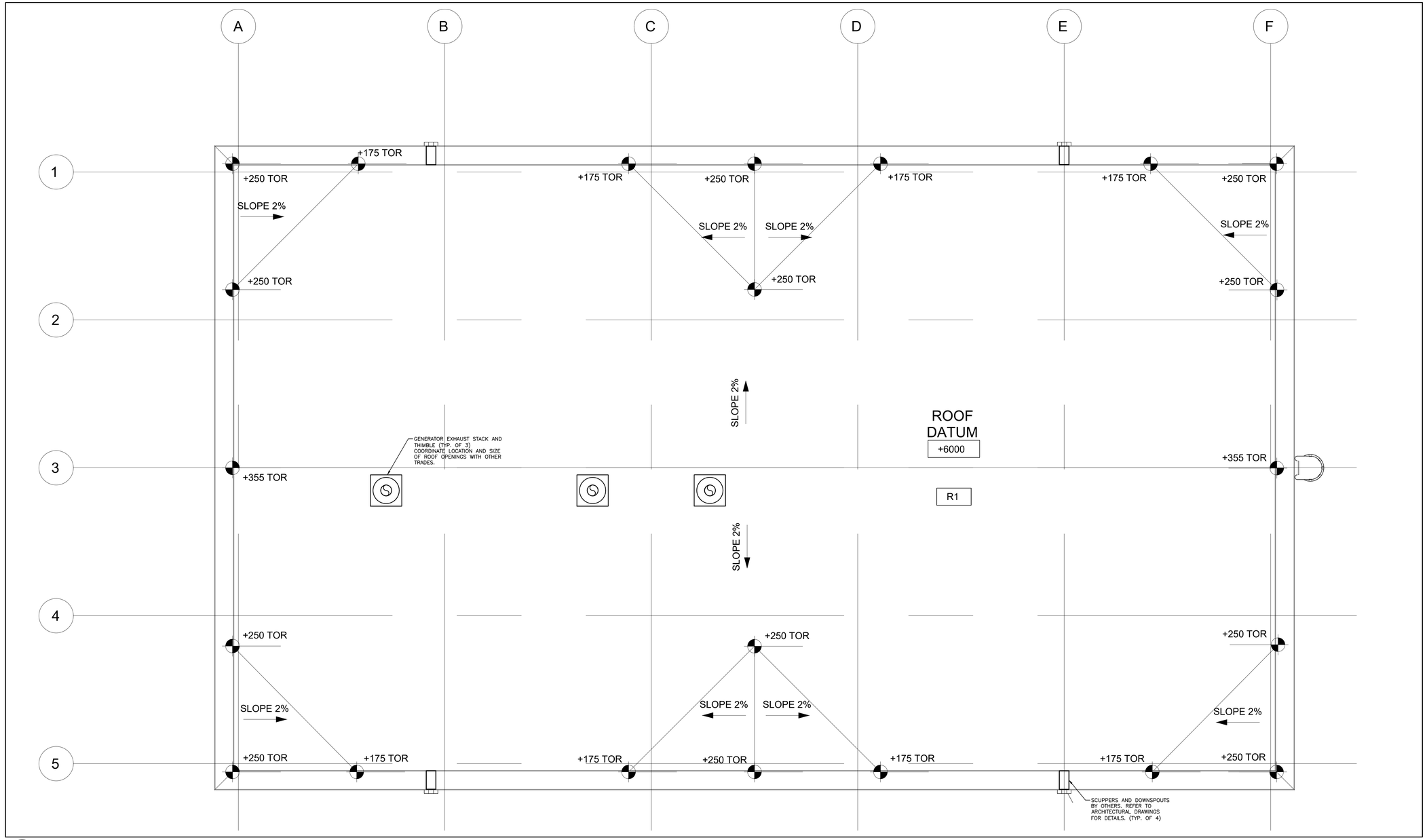

1 M-301 ROOF – NEW WORK
SCALE: 1:50

Key Plan:

Consultant:

MORRISON HERSHFIELD

Suite 300, 125 Commerce Valley Drive W.
Markham, ON L3T 7W4
Tel: (416) 499-3110 Fax: (416) 499-9658

Seal:

NORTH

REV	DESCRIPTION	DATE	BY
4	ISSUED FOR TENDER	JUN 13/19	GF
3	ISSUED FOR BUILDING PERMIT	JUN 3/ 19	GF
1	ISSUED FOR 100% REVIW	APR. 26/19	GF
A	ISSUED FOR CLIENT REVIEW	DEC 13/18	GF

DO NOT SCALE DRAWINGS. CONTRACTOR MUST VERIFY ALL DIMENSIONS AND ADVISE CONSULTANTS OF ANY ERRORS OR OMISSIONS. NO VARIATIONS OR MODIFICATIONS TO WORK SHOWN SHALL BE IMPLEMENTED WITHOUT PRIOR WRITTEN APPROVAL. ALL PREVIOUS ISSUES OF THIS DRAWING ARE SUPERSEDED BY THE LATEST REVISION. ALL DRAWINGS AND SPECIFICATIONS REMAIN THE PROPERTY OF MORRISON HERSHFIELD LIMITED.

Client:

Ontario Shores
Centre for Mental Health Sciences

Project:

NEW POWERHOUSE

700 GORDON STREET, WHITBY, ON L1N 5S9

Sheet Title:

ROOF - NEW WORK

Drawn By:	N.P.	Date:	08/20/18
Designed By:	G.F.	Checked By:	G.F.
Scale:	1:50	File Path:	BIM 360:\MH - 1802218 - Ontario Shores Powerhouse\1802218-Ontario Shores Powerhouse-RVT2018-ARCH.rvt
Project No:	1802218	Drawing No:	M-301

BIM 360://MH - 1802218 - Ontario Shores Powerhouse/1802218-Ontario Shores Powerhouse-RVT2018-ARCH.rvt
6/22/2018 1:10:37 AM

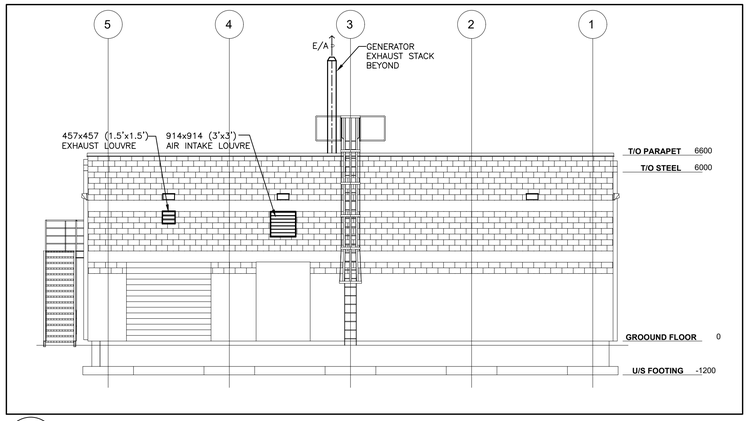

2 M-302 EAST ELEVATION
SCALE: 1:100

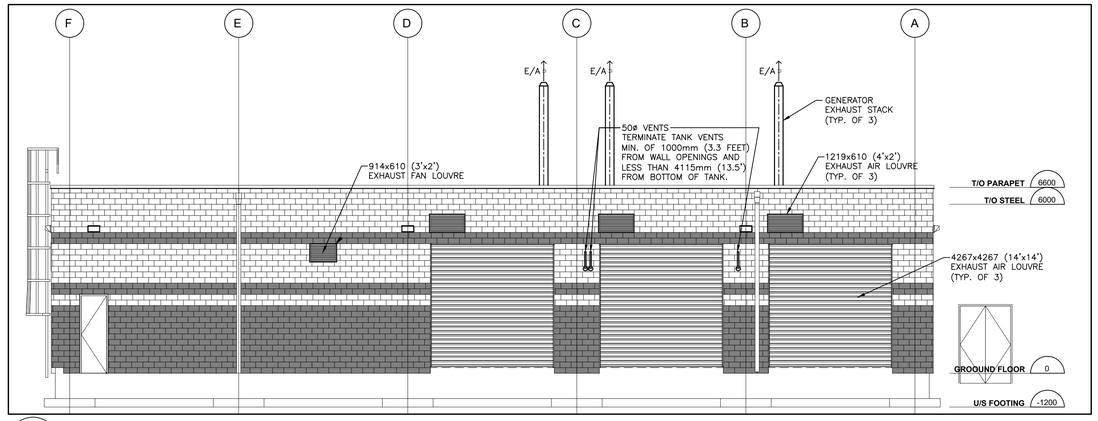

1 M-302 NORTH ELEVATION
SCALE: 1:100

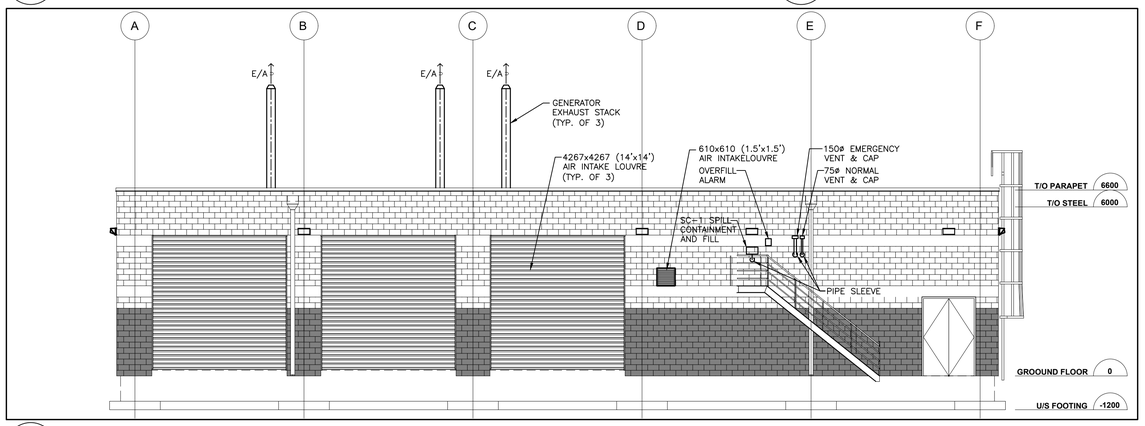

4 M-302 SOUTH ELEVATION
SCALE: 1:100

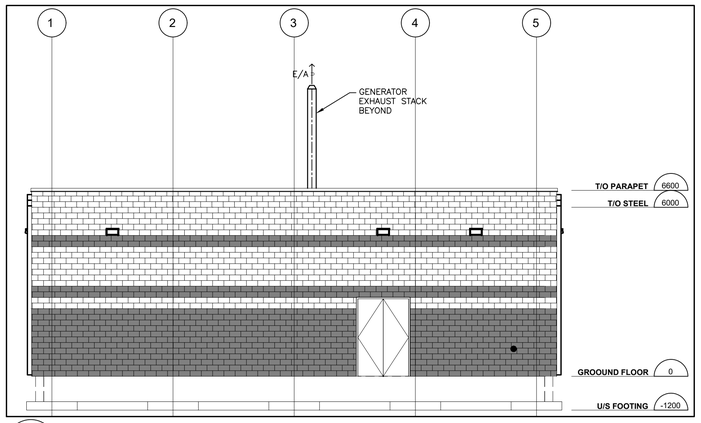

3 M-302 WEST ELEVATION
SCALE: 1:100

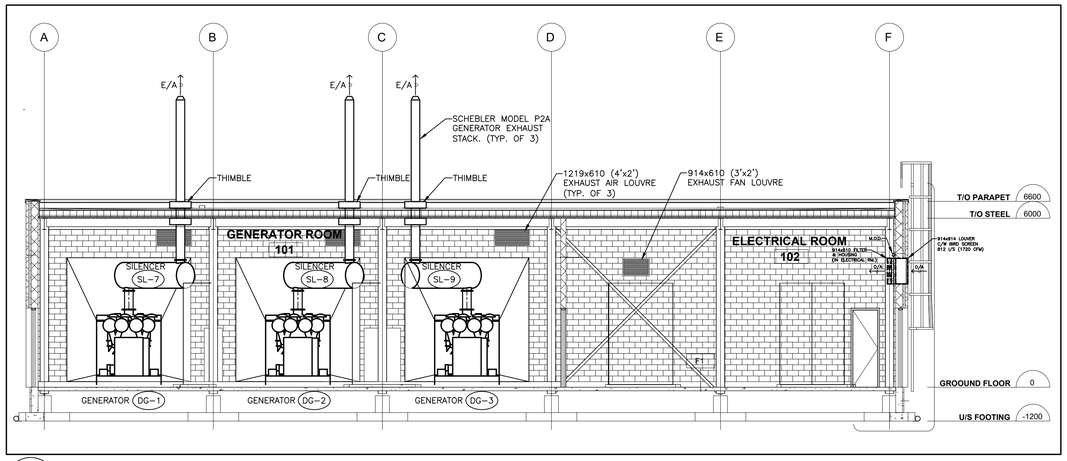

6 M-302 SECTION 2
SCALE: 1:100

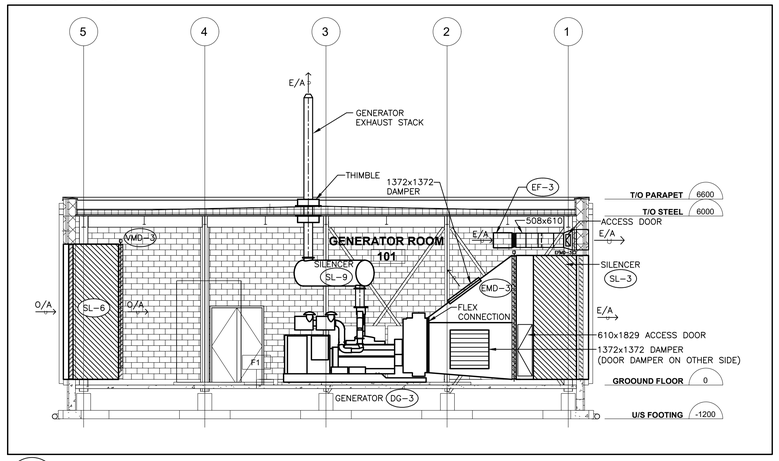

5 M-302 SECTION 1
SCALE: 1:100

Key Plan:

Consultant:

MORRISON HERSHFIELD

Suite 300, 125 Commerce Valley Drive W.
Markham, ON L3T 7W4
Tel: (416) 499-3110 Fax: (416) 499-9658

Seal:

REV	DESCRIPTION	DATE	BY
4	ISSUED FOR TENDER	JUN 13/19	GF
3	ISSUED FOR BUILDING PERMIT	JUN 3/ 19	GF
1	ISSUED FOR 100% REVIW	APR. 26/19	GF
A	ISSUED FOR CLIENT REVIEW	DEC 13/18	GF

DO NOT SCALE DRAWINGS. CONTRACTOR MUST VERIFY ALL DIMENSIONS AND ADVISE CONSULTANTS OF ANY ERRORS OR OMISSIONS. NO VARIATIONS OR MODIFICATIONS TO WORK SHOWN SHALL BE IMPLEMENTED WITHOUT PRIOR WRITTEN APPROVAL. ALL PREVIOUS ISSUES OF THIS DRAWING ARE SUPERSEDED BY THE LATEST REVISION. ALL DRAWINGS AND SPECIFICATIONS REMAIN THE PROPERTY OF MORRISON HERSHFIELD LIMITED.

Client:

Ontario Shores
Centre for Mental Health Sciences

Project:

NEW POWERHOUSE

700 GORDON STREET, WHITBY, ON L1N 5S9

Sheet Title:

SECTIONS AND ELEVATIONS

Drawn By:	N.P.	Date:	08/20/18
Designed By:	G.F.	Checked By:	G.F.
Scale:	AS SHOWN	File Path:	BIM 360:/M1 - 1802218 - Ontario Shores Powerhouse/1802218-Ontario Shores Powerhouse-RVT2018-ARCH.rvt
Project No:	1802218	Drawing No:	M-302

BIM 360:/M1 - 1802218 - Ontario Shores Powerhouse/1802218-Ontario Shores Powerhouse-RVT2018-ARCH.rvt
8/22/2018 1:10:22 AM

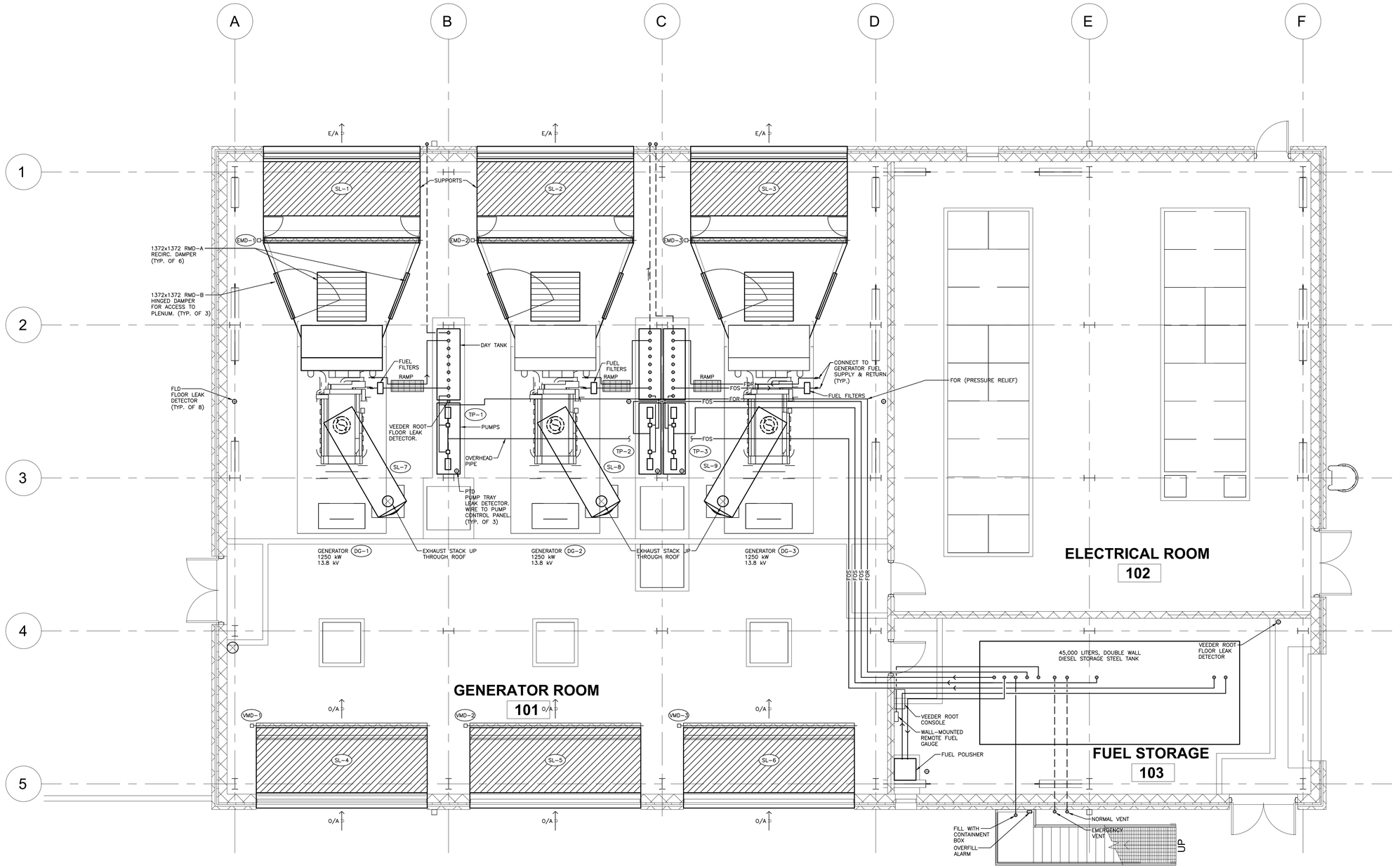

NOTES:

1. REFER TO FUEL SCHEMATIC 1/M-703 FOR VALVING ARRANGEMENT.
2. ALL PIPING SHALL BE WELDED WITH FLANGED FITTINGS.
3. REFER TO FUEL SCHEMATIC 2/M-703 FOR CONTROLS.

1 / M-400 GENERATOR ROOM – FUEL PIPE LAYOUT
SCALE: 1:50

BIM 360/Mh - 1802218 - Ontario Shores Powerhouse/1802218-Ontario Shores Powerhouse-RVT2018-ARCH.rvt
8/20/2018 1:10:23 AM

Key Plan:

Consultant:

MORRISON HERSHFIELD

Suite 300, 125 Commerce Valley Drive W.
Markham, ON L3T 7W4
Tel: (416) 499-3110 Fax: (416) 499-9658

Seal:

NORTH

REV	DESCRIPTION	DATE	BY
4	ISSUED FOR TENDER	JUN 13/19	GF
3	ISSUED FOR BUILDING PERMIT	JUN 3/ 19	GF
1	ISSUED FOR 100% REVIW	APR. 26/19	GF
A	ISSUED FOR CLIENT REVIEW	DEC 13/18	GF

DO NOT SCALE DRAWINGS. CONTRACTOR MUST VERIFY ALL DIMENSIONS AND ADVISE CONSULTANTS OF ANY ERRORS OR OMISSIONS. NO VARIATIONS OR MODIFICATIONS TO WORK SHOWN SHALL BE IMPLEMENTED WITHOUT PRIOR WRITTEN APPROVAL. ALL PREVIOUS ISSUES OF THIS DRAWING ARE SUPERSEDED BY THE LATEST REVISION. ALL DRAWINGS AND SPECIFICATIONS REMAIN THE PROPERTY OF MORRISON HERSHFIELD LIMITED.

Client:

Ontario Shores
Centre for Mental Health Sciences

Project:

NEW POWERHOUSE

700 GORDON STREET, WHITBY, ON L1N 5S9

Sheet Title:

GENERATOR ROOM - FUEL PIPE LAYOUT

Drawn By:	N.P.	Date:	08/20/18
Designed By:	G.F.	Checked By:	G.F.
Scale:	1:50	File Path:	BIM 360/Mh - 1802218 - Ontario Shores Powerhouse/1802218-Ontario Shores Powerhouse-RVT2018-ARCH.rvt
Project No: 1802218		Drawing No: M-400	

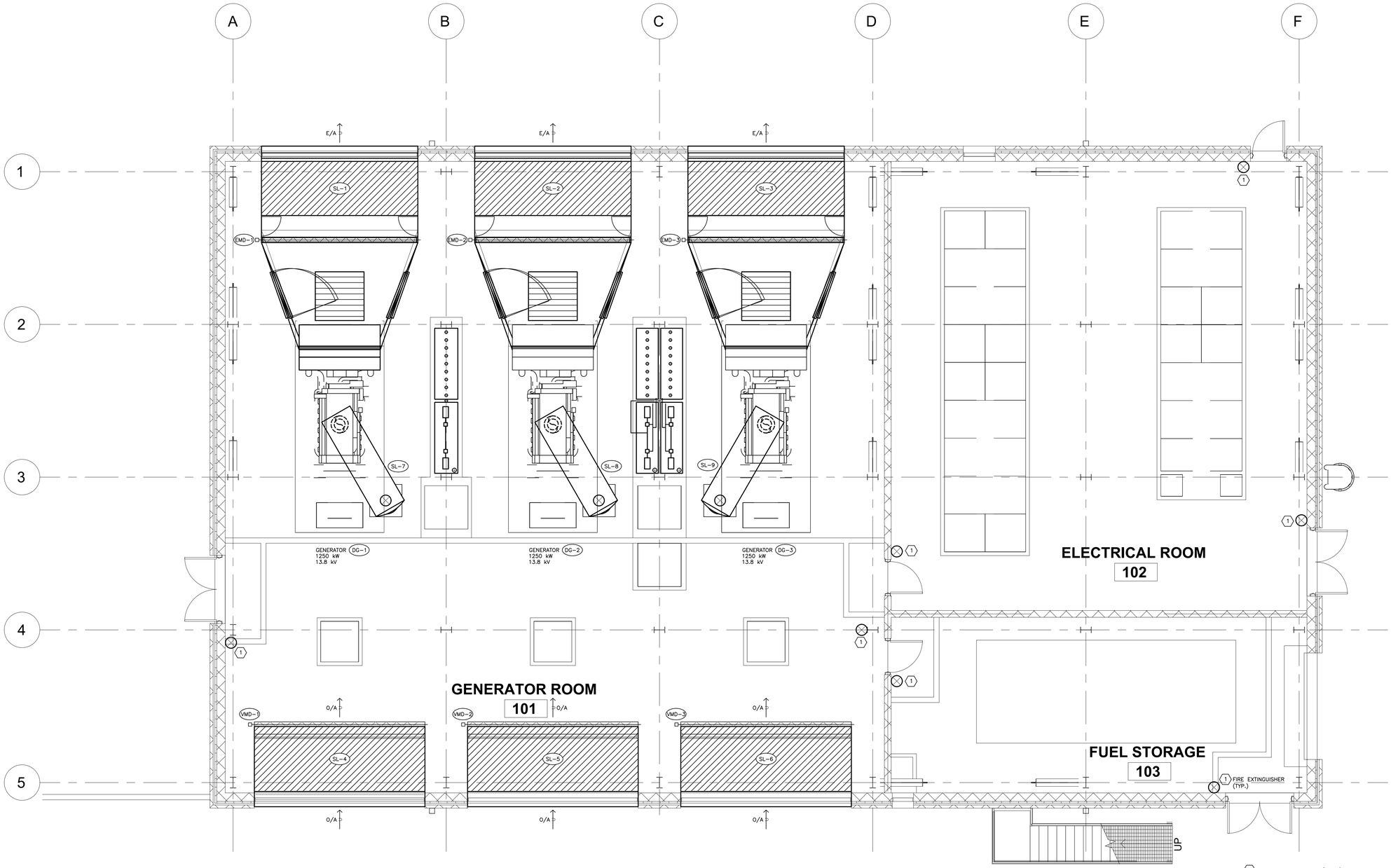

1 WALL MOUNTED 4.5kg (10 lb) TYPE ABC FIRE EXTINGUISHER. PROVIDE OVERHEAD SIGN WITH ARROW INDICATING LOCATION OF FIRE EXTINGUISHER. PROVIDE ALL MOUNTING HARDWARE. EXTINGUISHER TO BE INSTALLED SO THAT THE TOP OF THE EXTINGUISHER IS NOT MORE THAN 1.5 METERS ABOVE THE FLOOR.

1 / M-500 FIRE PROTECTIOM – FIRE EXTINGUISHERS
SCALE: 1:50

BIM 360/Mh - 1802218 - Ontario Shores Powerhouse/1802218-Ontario Shores Powerhouse-RVT2018-ARCH.rvt
8/20/2018 1:10:22 AM

Key Plan:

Consultant:

MORRISON HERSHFIELD
Suite 300, 125 Commerce Valley Drive W.
Markham, ON L3T 7W4
Tel: (416) 499-3110 Fax: (416) 499-9658

NORTH

Seal:

REV	DESCRIPTION	DATE	BY
4	ISSUED FOR TENDER	JUN 13/19	GF
3	ISSUED FOR BUILDING PERMIT	JUN 3/ 19	GF
1	ISSUED FOR 100% REVIW	APR. 26/19	GF
A	ISSUED FOR CLIENT REVIEW	DEC 13/18	GF

DO NOT SCALE DRAWINGS. CONTRACTOR MUST VERIFY ALL DIMENSIONS AND ADVISE CONSULTANTS OF ANY ERRORS OR OMISSIONS. NO VARIATIONS OR MODIFICATIONS TO WORK SHOWN SHALL BE IMPLEMENTED WITHOUT PRIOR WRITTEN APPROVAL. ALL PREVIOUS ISSUES OF THIS DRAWING ARE SUPERSEDED BY THE LATEST REVISION. ALL DRAWINGS AND SPECIFICATIONS REMAIN THE PROPERTY OF MORRISON HERSHFIELD LIMITED.

Client:

Ontario Shores
Centre for Mental Health Sciences

Project:

NEW POWERHOUSE

700 GORDON STREET, WHITBY, ON L1N 5S9

Sheet Title:

FIRE PROTECTION -
FIRE EXTINGUISHERS

Drawn By:	N.P.	Date:	08/20/18
Designed By:	G.F.	Checked By:	G.F.
Scale:	1:50	File Path:	BIM 360/Mh - 1802218 - Ontario Shores Powerhouse/1802218-Ontario Shores Powerhouse-RVT2018-ARCH.rvt
Project No:	1802218	Drawing No:	M-500

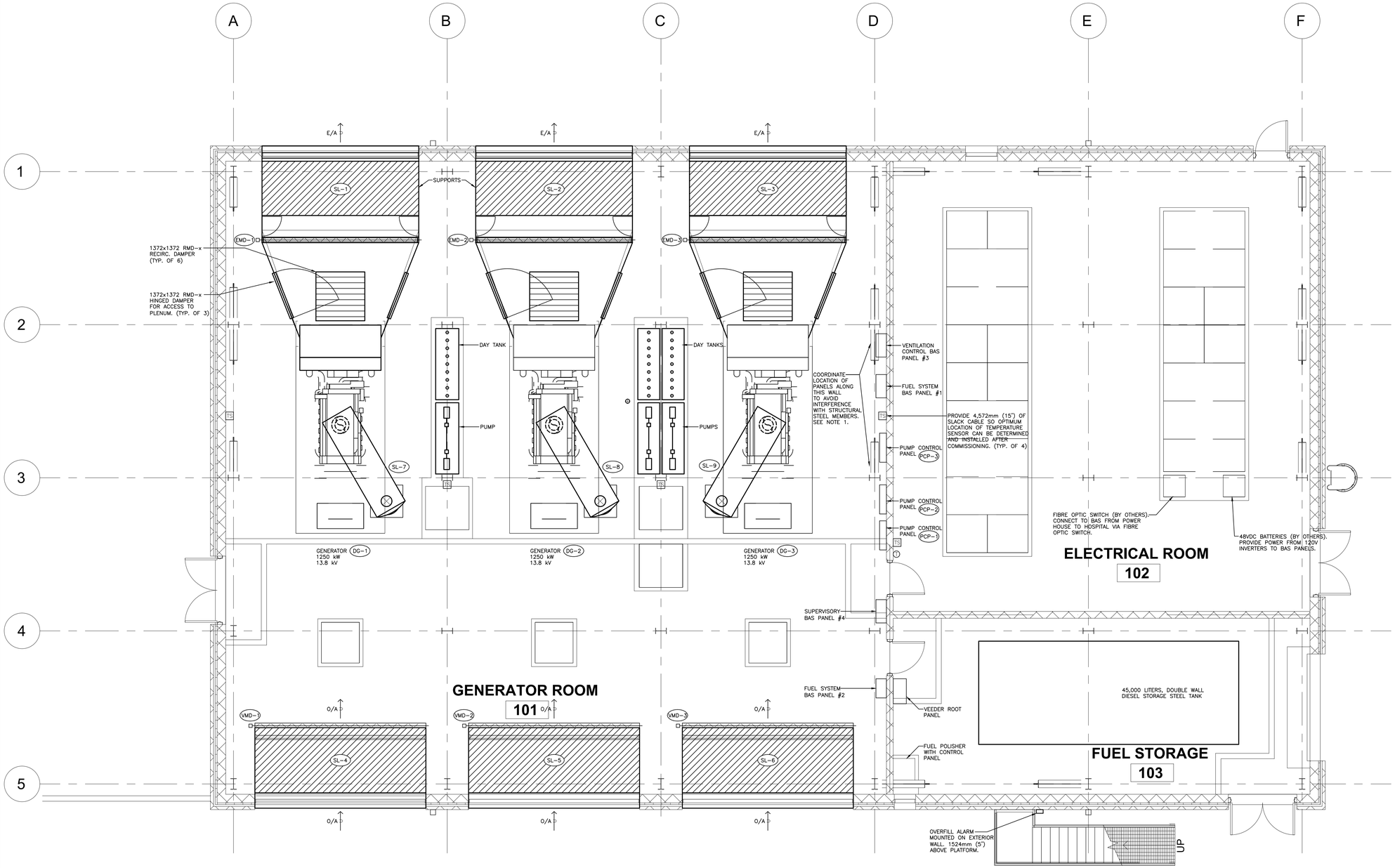

GENERAL NOTES:

1. THERE ARE TWO SETS OF 48 VDC LITHIUM-ION STATION BATTERIES AVAILABLE (REFER TO ELECTRICAL DRAWINGS). PROVIDE A 48 VDC DUO REDUNDANT POWER SUPPLY FOR THE BAS PANELS TO MAKE USE OF THESE BATTERIES. REFER TO ELECTRICAL DRAWINGS FOR LOCATION OF BATTERIES. PROVIDE ALL WIRING AND COMPONENTS NECESSARY.
2. PROVIDE 120 VOLT INVERTERS TO POWER BAS PANELS FROM THE BATTERIES.
3. CONNECT TO FIBRE OPTIC ETHERNET SWITCH IN ELECTRICAL ROOM. PROVIDE ALL HARDWARE/SOFTWARE AND PROGRAMMING FOR COMPLETE COMMUNICATION INTERFACE WITH FIBRE OPTICS.
4. REFER TO DRAWING M-701, M-702 AND M-703 FOR BAS SCHEMATICS AND DETAILS.

1 / M-700 CONTROLS EQUIPMENT LAYOUT
SCALE: 1:50

BM 360/IMH - 1802218 - Ontario Shores Powerhouse/1802218-Ontario Shores Powerhouse-RVT2018-ARCH.rvt
07/22/2018 1:07:37 AM

Key Plan:

Consultant:

MORRISON HERSHFIELD

Suite 300, 125 Commerce Valley Drive W.
Markham, ON L3T 7W4
Tel: (416) 499-3110 Fax: (416) 499-9658

Seal:

NORTH

REV	DESCRIPTION	DATE	BY
4	ISSUED FOR TENDER	JUN 13/19	GF
3	ISSUED FOR BUILDING PERMIT	JUN 3/ 19	GF
1	ISSUED FOR 100% REVIW	APR. 26/19	GF
A	ISSUED FOR CLIENT REVIEW	DEC 13/18	GF

DO NOT SCALE DRAWINGS. CONTRACTOR MUST VERIFY ALL DIMENSIONS AND ADVISE CONSULTANTS OF ANY ERRORS OR OMISSIONS. NO VARIATIONS OR MODIFICATIONS TO WORK SHOWN SHALL BE IMPLEMENTED WITHOUT PRIOR WRITTEN APPROVAL. ALL PREVIOUS ISSUES OF THIS DRAWING ARE SUPERSEDED BY THE LATEST REVISION. ALL DRAWINGS AND SPECIFICATIONS REMAIN THE PROPERTY OF MORRISON HERSHFIELD LIMITED.

Client:

Ontario Shores
Centre for Mental Health Sciences

Project:

NEW POWERHOUSE

700 GORDON STREET, WHITBY, ON L1N 5S9

Sheet Title:

CONTROLS EQUIPMENT LAYOUT

Drawn By:	N.P.	Date:	08/20/18
Designed By:	G.F.	Checked By:	G.F.
Scale:	1:50	File Path:	BM 360/IMH - 1802218 - Ontario Shores Powerhouse/1802218-Ontario Shores Powerhouse-RVT2018-ARCH.rvt
Project No:	1802218	Drawing No:	M-700

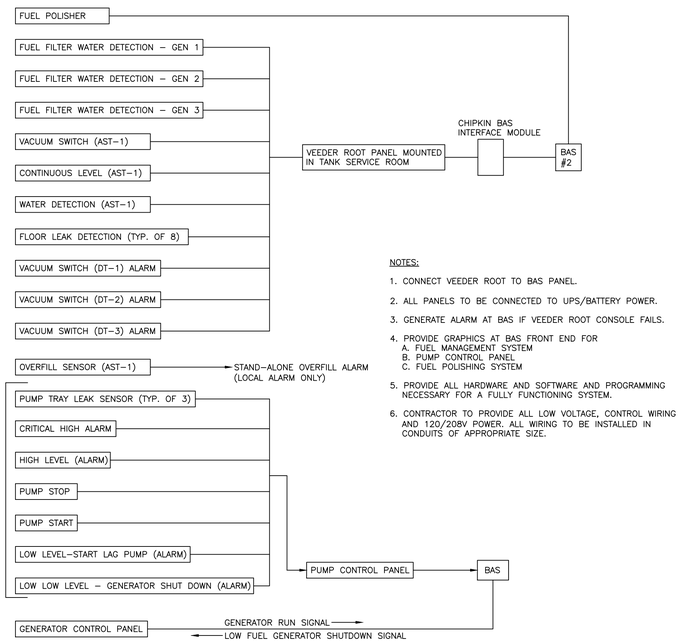

NOTES:

1. CONNECT VEEDER ROOT TO BAS PANEL.
2. ALL PANELS TO BE CONNECTED TO UPS/BATTERY POWER.
3. GENERATE ALARM AT BAS IF VEEDER ROOT CONSOLE FAILS.
4. PROVIDE GRAPHICS AT BAS FRONT END FOR
   A. FUEL MANAGEMENT SYSTEM
   B. PUMP CONTROL PANEL
   C. FUEL POLISHING SYSTEM
5. PROVIDE ALL HARDWARE AND SOFTWARE AND PROGRAMMING NECESSARY FOR A FULLY FUNCTIONING SYSTEM.
6. CONTRACTOR TO PROVIDE ALL LOW VOLTAGE, CONTROL WIRING AND 120/208V POWER. ALL WIRING TO BE INSTALLED IN CONDUITS OF APPROPRIATE SIZE.

2 M–701 FUEL SYSTEM CONTROLS ARCHITECTURE
N.T.S.

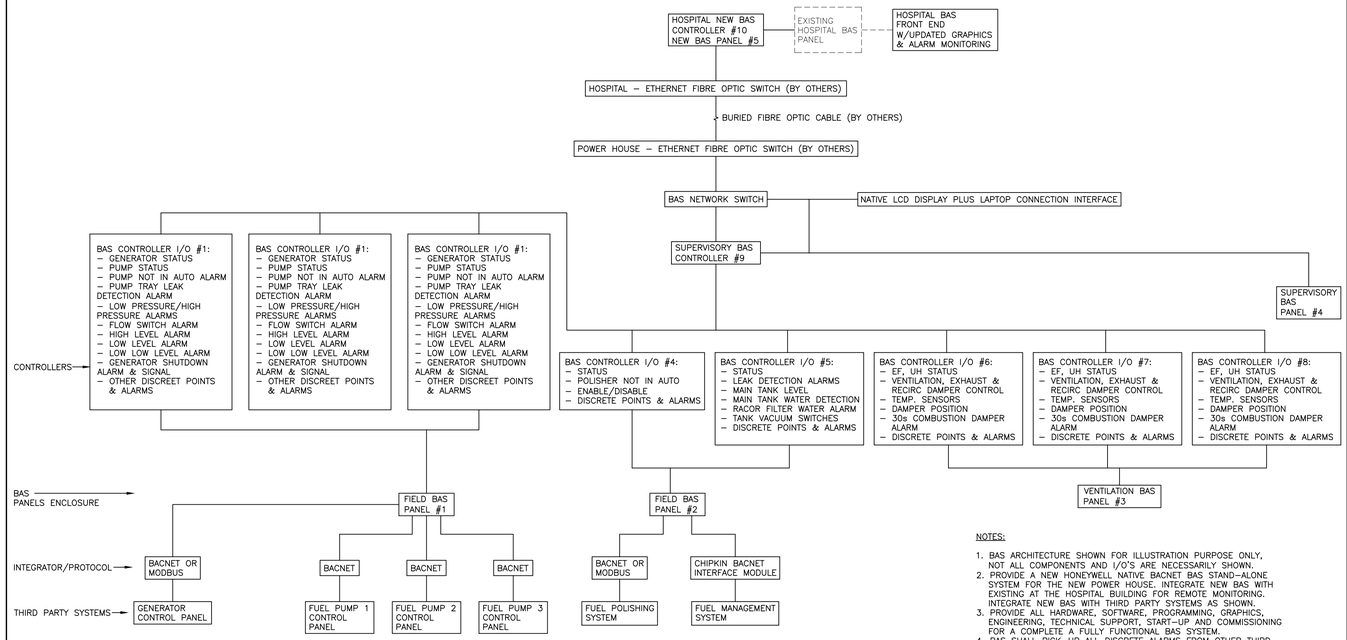

NOTES:

1. BAS ARCHITECTURE SHOWN FOR ILLUSTRATION PURPOSE ONLY, NOT ALL COMPONENTS AND I/O'S ARE NECESSARILY SHOWN.
2. PROVIDE A NEW HONEYWELL NATIVE BACNET BAS STAND–ALONE SYSTEM FOR THE NEW POWER HOUSE. INTEGRATE NEW BAS WITH EXISTING AT THE HOSPITAL BUILDING FOR REMOTE MONITORING. INTEGRATE NEW BAS WITH THIRD PARTY SYSTEMS AS SHOWN.
3. PROVIDE ALL HARDWARE, SOFTWARE, PROGRAMMING, GRAPHICS, ENGINEERING, TECHNICAL SUPPORT, START–UP AND COMMISSIONING FOR A COMPLETE A FULLY FUNCTIONAL BAS SYSTEM.
4. BAS SHALL PICK–UP ALL DISCRETE ALARMS FROM OTHER THIRD PARTY SYSTEMS SUCH AS BUT NOT LIMITED TO: PUMP CONTROL PANELS, FUEL POLISHER, FUEL MANAGEMENT SYSTEM, ETC.
5. ALL CONNECTIONS BETWEEN HONEYWELL AND THIRD PARTY SYSTEMS TO BE BACNET MS/TP OR BACNET IP SO THAT ALL POINTS ARE VISIBLE AT FRONT END, INDIVIDUAL POINTS CAN BE MONITORED/ CONTROLLED AND DISCRETE ALARMS RECEIVED.
6. FIBRE OPTIC TERMINATION IS LOCATED IN THE POWER HOUSE ELECTRICAL ROOM AND HOSPITAL BUILDING 1/2 ELECTRICAL ROOM.
7. HONEYWELL TO PROVIDE REQUIRED HARDWARE/SOFTWARE AND PROGRAMMING INTERFACE BETWEEN THE BAS PANELS AND THE FIBRE OPTIC TERMINATION. THE SAME APPLIES AT THE HOSPITAL END WHERE THE FIBRE OPTIC TERMINATION IS LOCATED IN BUILDING 1/2 ELECTRICAL ROOM.
8. ALL WIRING UNLESS NOTED OTHERWISE IS THE RESPONSIBILITY OF THE BAS CONTRACTOR. ALL WIRING SHALL BE IN CONDUITS OF APPROPRIATE SIZE.
9. PROVIDE COMPLETE GRAPHICS PACKAGE AT THE HOSPITAL BAS FOR MECHANICAL EQUIPMENT ADDED IN POWER HOUSE.
10. PROVIDE SPARE I/Os IN BAS PANELS FOR FUTURE USE.
11. MAKE ALLOWANCE FOR ADDITIONAL POINTS (I/O & ALARMS) NOT SHOWN.
12. CONTACT VIDA SAFARI AT HONEYWELL – VIDA SAFARI@HONETWELL.COM

1 M–701 BAS ARCHITECTURE
N.T.S.

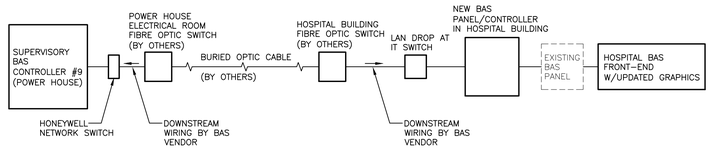

NOTES:

1. PROVIDE HARDWARE, SOFTWARE AND WIRING INTERFACE BETWEEN BAS PANEL AND FIBRE OPTIC PANEL FOR REQUIRED COMMUNICATIONS LINK.
2. BAS CONTRACTOR SHALL BE RESPONSIBLE TO ARRANGE AND COORDINATE WITH THE HOSPITAL'S IT DEPARTMENT TO PROVIDE IT DROPS AT THE NECESSARY LOCATIONS FOR THE BAS SYSTEM.
3. ABOVE SCHEMATIC IS REPRESENTATIVE OF THE DESIGN INTENT AND NOT A WIRING DIAGRAM.
4. ALL WIRING UNLESS NOTED OTHERWISE IS THE RESPONSIBILITY OF THE BAS CONTRACTOR.

3 M–701 BAS COMMUNICATION LINK BETWEEN NEW POWER HOUSE AND HOSPITAL
N.T.S.

Key Plan:

Consultant:

MORRISON HERSHFIELD
Suite 300, 125 Commerce Valley Drive W.
Markham, ON L3T 7W4
Tel: (416) 499–3110 Fax: (416) 499–9658

Seal:

REV	DESCRIPTION	DATE	BY
4	ISSUED FOR TENDER	JUN 13/19	GF
3	ISSUED FOR BUILDING PERMIT	JUN 3/ 19	GF
1	ISSUED FOR 100% REVIW	APR. 26/19	GF
A	ISSUED FOR CLIENT REVIEW	DEC 13/18	GF

DO NOT SCALE DRAWINGS. CONTRACTOR MUST VERIFY ALL DIMENSIONS AND ADVISE CONSULTANTS OF ANY ERRORS OR OMISSIONS. NO VARIATIONS OR MODIFICATIONS TO WORK SHOWN SHALL BE IMPLEMENTED WITHOUT PRIOR WRITTEN APPROVAL. ALL PREVIOUS ISSUES OF THIS DRAWING ARE SUPERSEDED BY THE LATEST REVISION. ALL DRAWINGS AND SPECIFICATIONS REMAIN THE PROPERTY OF MORRISON HERSHFIELD LIMITED.

Client:

Ontario Shores
Centre for Mental Health Sciences

Project:

NEW POWERHOUSE

700 GORDON STREET, WHITBY, ON L1N 5S9

Sheet Title:

CONTROLS

Drawn By:	N.P.	Date:	08/20/18
Designed By:	G.F.	Checked By:	G.F.
Scale:	N.T.S.	File Path:	BIM 360:\IMH - 1802218 - Ontario Shores Powerhouse\1802218-Ontario Shores Powerhouse-RVT2018-ARCH.rvt
Project No:	1802218	Drawing No:	M-701

BIM 360:/IMH - 1802218 - Ontario Shores Powerhouse/1802218-Ontario Shores Powerhouse-RVT2018-ARCH.rvt
8/22/2018 11:00:17 AM

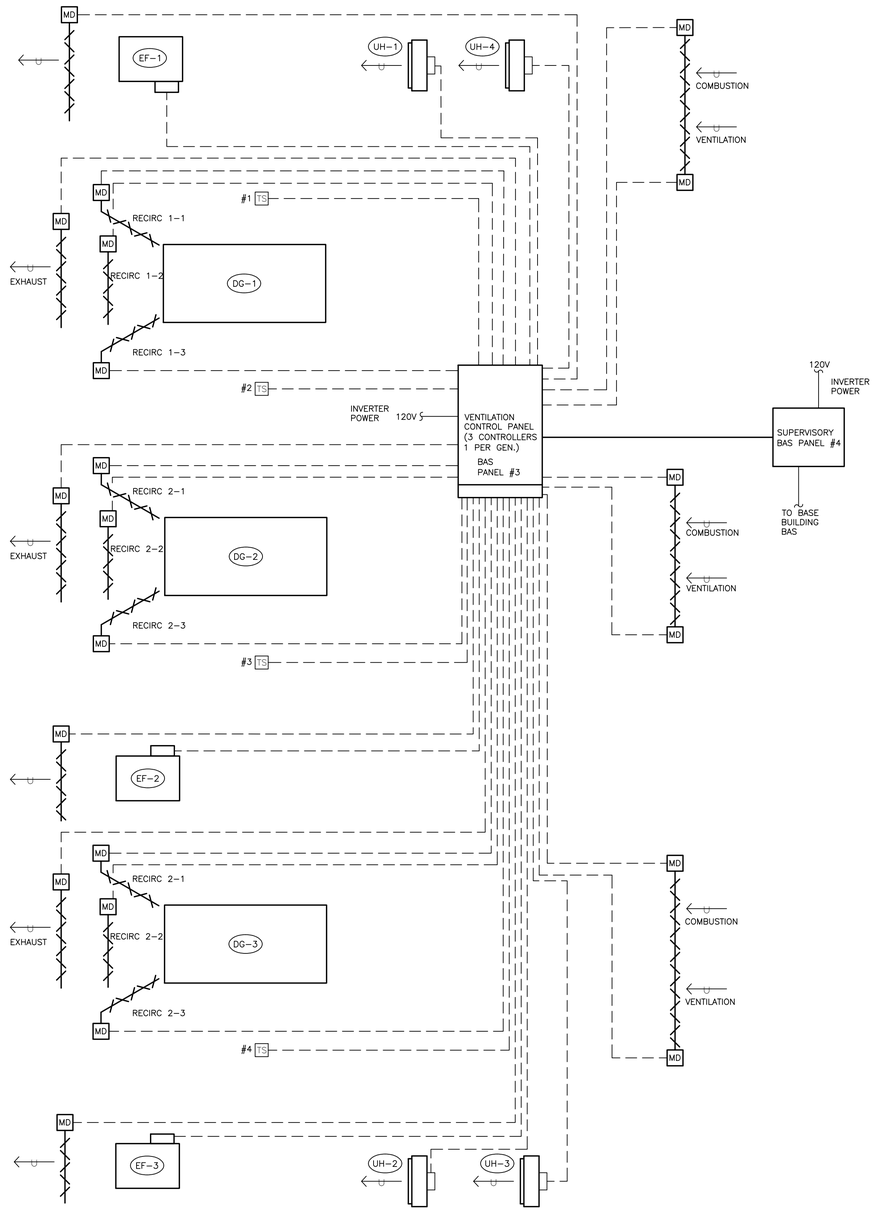

SEQUENCE OF OPERATIONS:

PROVIDE ALL COMPONENTS, HARDWARE, SOFTWARE, WIRING, INSTALLATION, PROGRAMMING, GRAPHICS, ENGINEERING, TESTING AND COMMISSIONING FOR A FULLY FUNCTIONAL SYSTEM. VENTILATION CONTROL PANEL SHALL HAVE A MINIMUM OF THREE CONTROLLERS, ONE PER GENERATOR FOR THE PURPOSE OF CONTROLLING VENTILATION. ALL WIRING UNLESS NOTED OTHERWISE IS THE RESPONSIBILITY OF THE BAS CONTRACTOR.

DAMPER SIZES ARE NOMINAL. DIMENSIONS MUST BE CONFIRMED WITH SITE MEASUREMENTS AND COORDINATED WITH OTHER TRADES. PROVIDE AS MANY DAMPER SECTIONS AS REQUIRED FOR SIZE OF OPENING. PROVIDE AS MANY ELECTRIC ACTUATORS AS NECESSARY FOR DAMPER SECTIONS.

1. CONTROLS SYSTEM SHALL ADMINISTER AIR FOR COMBUSTION AND VENTILATION TO THE GENERATOR ROOM WHEN GENERATORS ARE RUNNING AND PROVIDE HEATING AND COOLING WHEN GENERATORS ARE OFF. IN ADDITION, MONITORING AND ALARMS SHALL BE ANNUNCIATED LOCALLY AND REMOTELY BY THE BAS.
2. COMBUSTION AND VENTILATION DAMPERS (AIR INTAKE) SHALL BE FAIL SAFE SPRING OPEN UNDER 30 SECONDS AND POWER TO CLOSE. TWO POSITION ACTUATORS WITH AUXILIARY SWITCH FOR POSITIONAL FEED BACK.
3. EXHAUST AIR DAMPERS SHALL BE FAIL SAFE SPRING OPEN, POWER TO CLOSE, MODULATING ACTUATORS.
4. RE CIRCULATION DAMPERS SHALL BE NORMALLY CLOSED. SPRING CLOSE, POWER TO OPEN, MODULATING ACTUATORS.
5. THERE ARE TWO MODES OF OPERATION:
   A) NORMAL POWER – GENERATORS OFF
   B) EMERGENCY POWER – GENERATOR RUNNING

A) NORMAL POWER (GENERATORS OFF):
1. COMBUSTION AND VENTILATION DAMPERS ARE CLOSED
2. EXHAUST AIR DAMPERS ARE CLOSED
3. RECIRCULATION DAMPERS ARE CLOSED
4. WHEN THE GENERATORS ARE OFF, THE UNIT HEATERS AND EXHAUST FANS ARE ENABLED.
5. UNIT HEATERS AND EXHAUST FANS STATUS AND ALARMS ARE MONITORED.
6. EACH OF THE FOUR TEMPERATURE SENSORS SHALL START/STOP A UNIT HEATER OR EF VIA THE VENTILATION CONTROL PANEL TO MAINTAIN TEMPERATURE SET POINT:
   i) HEATING TEMPERATURE SET POINT IS 18 DEG C (ADJ.) – UNIT HEATERS TURN ON WHEN TEMPERATURE FALLS BELOW SET POINT AND TURN OFF WHEN SET POINT IS REACHED
   ii) COOLING TEMPERATURE SET POINT IS 28 DEG C (ADJ.) – EXHAUST FANS TURN ON WHEN TEMPERATURE EXCEEDS SET POINT AND TURN OFF WHEN SET POINT IS REACHED
   iii) DEAD BAND BETWEEN 18 AND 28 DEG C WHERE NEITHER HEATING NOR COOLING TAKES PLACE

B) EMERGENCY POWER (GENERATORS RUNNING):
1. UPON RECEIVING A GENERATOR START SIGNAL FROM THE GENERATOR CONTROL PANEL:
   i) COMBUSTION AND VENTILATION DAMPERS OPEN
   ii) EXHAUST AIR DAMPERS OPEN AND BEGIN TO MODULATE
   iii) RE CIRCULATION DAMPERS OPEN AND BEGIN TO MODULATE BASED ON TEMPERATURE SET POINT. UTILIZE TEMPERATURE READINGS FROM TEMPERATURE SENSORS TS#1 THROUGH TS#4.
2. UNIT HEATERS AND EXHAUST FANS ARE DISABLED.
3. WHEN THE GENERATORS ARE OFF AND THE EXHAUST FANS ARE COMMANDED ON (TEMPERATURE ABOVE 28°C), BOTH VENTILATION (AIR INTAKE) AND EXHAUST FAN DAMPERS SHOULD OPEN AND BE PROVED OPEN BEFORE STARTING THE FAN.
4. FOR EMERGENCY POWER (GENERATORS RUNNING) OPERATION, THE COMBUSTION, VENTILATION (AIR INTAKE) AND EXHAUST AIR DAMPERS MUST FAIL OPEN BY SPRING ACTION IN UNDER 30 SECONDS DUE TO LOSS OF POWER, OR INTERRUPTION OF POWER WHEN THE GENERATOR STARTS. IF DAMPERS FAIL TO OPEN WITHIN SPECIFIED TIME, GENERATE A NON–LATCHING ALARM AT THE BAS.
5. BAS SHALL BE NATIVE BACNET
6. TYPICAL CAT5 SHOWN SHALL BE CAT6, TYPICAL OF ALL BAS COMMUNICATIONS CABLING UNLESS NOTED OTHERWISE.
7. COORDINATE BACNET COMMUNICATIONS REQUIREMENTS WITH THE VARIOUS VENDORS FOR: FUEL PUMP, FUEL MANAGEMENT AND FUEL POLISHER.
8. COORDINATE REQUIREMENTS FOR LAN DROPS WITH HOSPITAL IT PERSONNEL.
9. MS/TP_ BACNET WIRING GUIDELINES (BACNET PAIGE 740045 OR BELDEN 82760)

a. ALL FIELD WIRING MUST CONFORM TO LOCAL ELECTRICAL CODES AND ORDINANCES OR AS SPECIFIED ON INSTALLATION WIRING DIAGRAMS.
b. AN MS/TP EIA–485 NETWORK SHALL USE SHIELDED, TWISTED–PAIR CABLE WITH CHARACTERISTIC IMPEDANCE BETWEEN 100 AND 130 OHMS. DISTRIBUTED CAPACITANCE BETWEEN CONDUCTORS SHALL BE LESS THAN 100 PF PER METER (30 PF PER FOOT). DISTRIBUTED CAPACITANCE BETWEEN CONDUCTORS AND SHIELD SHALL BE LESS THAT 200 PF PER METER (60 PF PER FOOT). FOIL OR BRAIDED SHIELDS ARE ACCEPTABLE. THE MAXIMUM RECOMMENDED LENGTH OF AN MS/TP SEGMENT IS 1200 METERS (4000 FEET) WITH AWG 18 (0.82 MM2 CONDUCTOR AREA) CABLE. THE USE OF GREATER DISTANCES AND/OR DIFFERENT WIRE GAUGES SHALL COMPLY WITH THE ELECTRICAL SPECIFICATIONS OF EIA–485.
SOME POSSIBLE WIRE TYPES
BELDEN 8760, 18 AWG (0.82 SQ MM) ONE TWISTED PAIR, STRANDED, SHIELDED, NON––PLENUM BELDEN 82760, 18 AWG (0.82 SQ MM) ONE TWISTED PAIR, STRANDED, SHIELDED, PLENUM
BELDEN 9841, 24 AWG (0.20 SQ MM) ONE TWISTED PAIR, STRANDED, SHIELDED, NON––PLENUM BELDEN 9842, 24 AWG (0.20 SQ MM) TWO TWISTED PAIR, STRANDED, SHIELDED, NON–PLENUM PAIGE 740045, 18 AWG (0.82 SQ MM) ONE TWISTED PAIR, STRANDED, SHIELDED, PLENUM
PAIGE 740057, 18 AWG (0.82 SQ MM) ONE TWISTED PAIR, STRANDED, SHIELDED, NON––PLENUM

c. UNSWITCHED 24 VAC POWER WIRING CAN BE RUN IN THE SAME CONDUIT AS THE BACNET MS/TP BUS CABLE.
d. DO NOT USE DIFFERENT WIRE TYPES OR GAUGES ON THE SAME BACNET MS/TP SEGMENT. THE STEP CHANGE IN LINE IMPEDANCE CHARACTERISTICS CAUSES UNPREDICTABLE REFLECTIONS ON THE BUS.
e. IN NOISY (HIGH EMI) ENVIRONMENTS, AVOID WIRE RUNS PARALLEL TO NOISY POWER CABLES, OR LINES CONTAINING LIGHTING DIMMER SWITCHES, AND KEEP AT LEAST 3 IN (76 MM) OF SEPARATION BETWEEN NOISY LINES AND THE BACNET MS/TP CABLE.
f. DO NOT ROUTE ANY NETWORK WIRES CLOSE TO HIGH VOLTAGE OR HIGH CURRENT WIRES. IT IS RECOMMENDED THAT NETWORK WIRING BE IN ITS OWN CONDUIT OR TROUGH. IT MAY, HOWEVER, BE ROUTED WITH LOW VOLTAGE WIRES. IF THE NETWORK CABLE MUST CROSS HIGH VOLTAGE OR CURRENT WIRES, THE NETWORK CABLE MUST CROSS PERPENDICULAR TO THE HIGH VOLTAGE OR CURRENT WIRES.
g. MAKE SURE THAT THE BACNET MS/TP SHIELD IS NOT BROKEN THROUGHOUT THE ENTIRE LENGTH OF CABLE.
h. CONNECT THE SHIELD TO FGND AT EVERY CONTROLLER. CONNECT THE SHIELD TO EARTH GROUND AT THE PLANT CONTROLLER END OF THE BUS ONLY.
I CONNECT SHIELD THROUGH EACH DEVICE ON THE FGND TERMINAL, AND ONE END TO THE LOCAL EARTH POINT.
j. DO NOT CONNECT SHIELD TO CONTROLLER COMMON TERMINALS. CONNECT TO FGND TERMINAL ONLY.
CABLING RULES:
A.NO T–TAPS, STUBS, STARS, SPURS OF ANY LENGTH ARE ALLOWED IN BUS WIRING. ALWAYS USE POINT–TO–POINT, DAISY CHAIN WIRING, INCLUDING INSIDE THE CABINETS.

1 / M–702 GENERATOR ROOM VENTILATION SCHEMATIC
N.T.S.

Key Plan:

Consultant:

MORRISON HERSHFIELD
Suite 300, 125 Commerce Valley Drive W.
Markham, ON L3T 7W4
Tel: (416) 499–3110 Fax: (416) 499–9658

Seal:

REV	DESCRIPTION	DATE	BY
4	ISSUED FOR TENDER	JUN 13/19	GF
3	ISSUED FOR BUILDING PERMIT	JUN 3/ 19	GF
1	ISSUED FOR 100% REVIW	APR. 26/19	GF
A	ISSUED FOR CLIENT REVIEW	DEC 13/18	GF

DO NOT SCALE DRAWINGS. CONTRACTOR MUST VERIFY ALL DIMENSIONS AND ADVISE CONSULTANTS OF ANY ERRORS OR OMISSIONS. NO VARIATIONS OR MODIFICATIONS TO WORK SHOWN SHALL BE IMPLEMENTED WITHOUT PRIOR WRITTEN APPROVAL. ALL PREVIOUS ISSUES OF THIS DRAWING ARE SUPERSEDED BY THE LATEST REVISION. ALL DRAWINGS AND SPECIFICATIONS REMAIN THE PROPERTY OF MORRISON HERSHFIELD LIMITED.

Client:

Ontario Shores
Centre for Mental Health Sciences

Project:

NEW POWERHOUSE

700 GORDON STREET, WHITBY, ON L1N 5S9

Sheet Title:

GENERATOR ROOM VENTILATION SCHEMATIC

Drawn By:	N.P.	Date:	08/20/18
Designed By:	G.F.	Checked By:	G.F.
Scale:	N.T.S.	File Path:	BIM 360:/Mh - 1802218 - Ontario Shores Powerhouse/1802218-Ontario Shores Powerhouse-RVT2018-ARCH.rvt
Project No:	1802218	Drawing No:	M-702

BIM 360:/Mh - 1802218 - Ontario Shores Powerhouse/1802218-Ontario Shores Powerhouse-RVT2018-ARCH.rvt
8/22/2018 1:07:37 AM

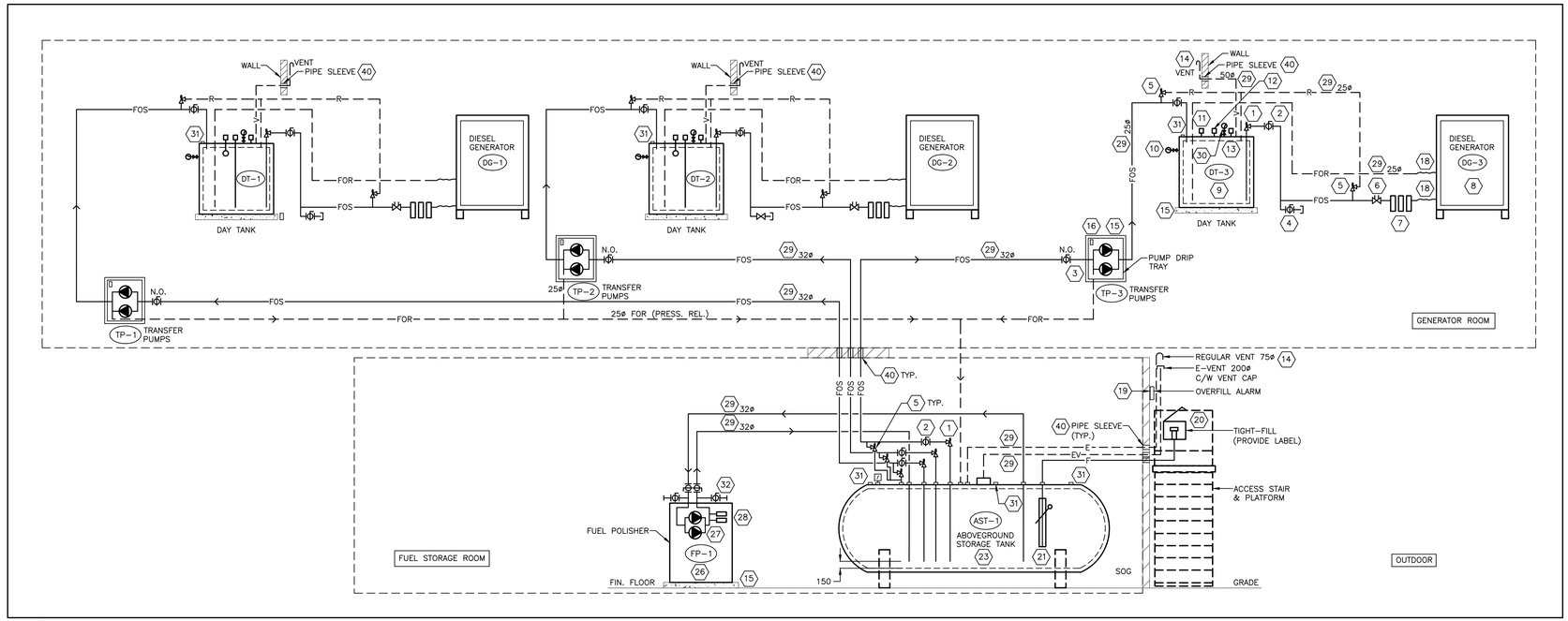

1 M-703 FUEL SYSTEM PIPING SCHEMATIC
N.T.S.

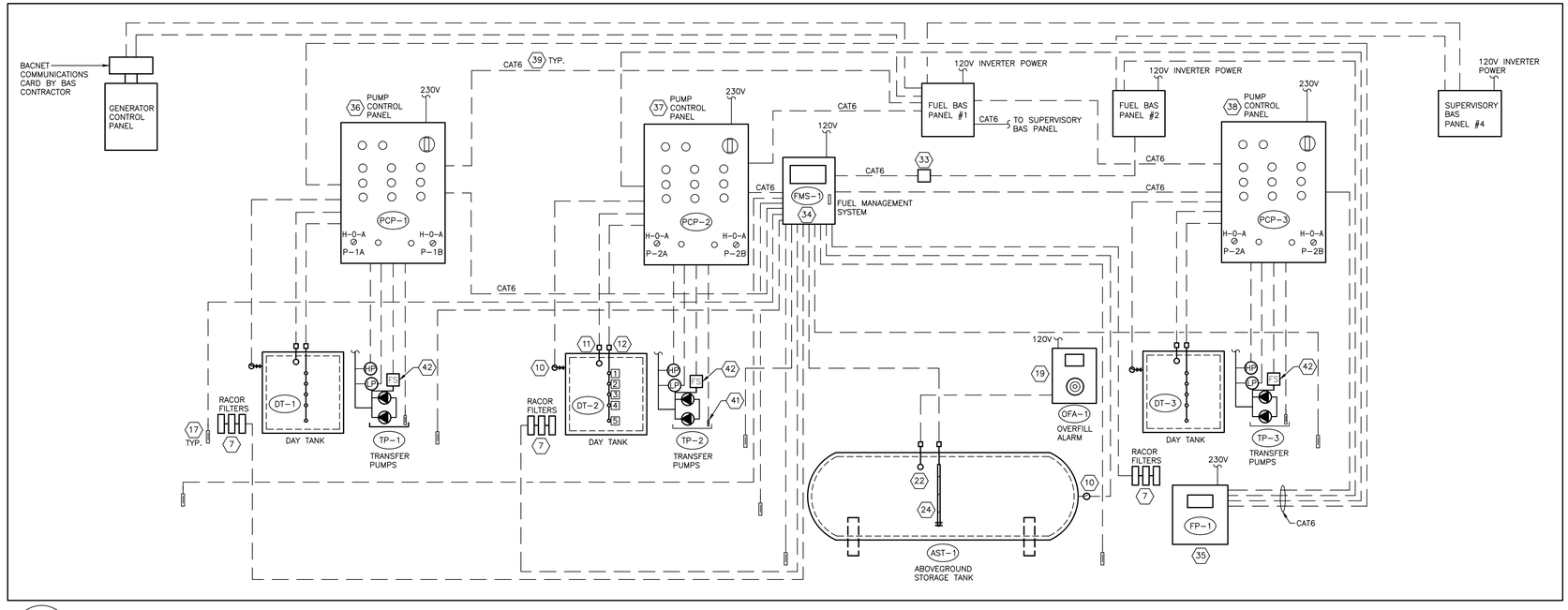

2 M-703 FUEL SYSTEM CONTROLS SCHEMATIC
N.T.S.

REFERENCE NOTES:

1. ANTI-SIPHON VALVE (ASV-1) – EBW C/W BUILT-IN PRESSURE RELIEF. ULC LISTED
2. SHUT-OFF VALVE (SV-1) – JOMAR BALL VALVE. ULC LISTED
3. DUPLEX PUMPS C/W BACNET COMMUNICATIONS CARD, SHUT-OFF VALVES, PRESSURE SWITCHES, FLOW SWITCHES, DRIP TRAY AND 100mm HIGH HOUSEKEEPING PAD.
4. TEST-TEE FOR ANTI-SIPHON VALVE. INSTALL AT LOWEST POINT.
5. PRESSURE RELIEF VALVE (PRV-1) – FULFLO
6. FIRE VALVE (FS-1) – MORRISON BROS
7. FUEL FILTERS – RACOR, 3 CARTRIDGE WITH WATER SEPARATOR. MONITOR WATER ALARM AT FILTERS.
8. GENERATOR
9. DAY TANK – DOUBLE WALL ULC S602
10. VACUUM GAUGE & SWITCH. WIRE TO PUMP CONTROL PANEL UNLESS NOTED OTHERWISE.
11. CRITICAL HIGH LEVEL PROBE CH-1 SET AT 95% LEVEL. WIRE TO PUMP CONTROL PANEL
12. 5-LEVEL PUMP CONTROL PROBE (HLF). WIRE TO PUMP CONTROL PANEL
    1 90% – PUMP STOP & HIGH LEVEL ALARM
    2 85% – PUMP STOP
    3 70% – PUMP START
    4 60% – START LAG PUMP & LOW LEVEL ALARM
    5 10% – VERY LOW LEVEL. SHUT DOWN GENERATOR
13. TANK ANALOG GAUGE
14. NORMAL VENT C/W ULC VENT CAP TERMINATION AND PIPE SLEEVE
15. HOUSEKEEPING PAD – 100mm HIGH
16. LEAK DETECTOR IN DRIP TRAY. WIRE TO PUMP CONTROL PANEL
17. FLOOR LEAK DETECTOR (FLD) – VEEDER ROOT. WIRE TO VEEDER ROOT CONSOLE (TYP. OF 8)
18. FIRE HOSE – STAINLESS STEEL, ULC LISTED
19. OVERFILL ALARM – K-TECH
20. SPILL BOX (SC-1) C/W CAM-LOCK CONNECTION, ULC LISTED
21. OVERFILL VALVE
22. OVERFILL PROBE (CH-2). CONNECT TO OVERFILL ALARM OUTDOORS
23. ABOVEGROUND STORAGE TANK. DOUBLE-WALL, ULC S601
24. CONTINUOUS LEVEL PROBE (CL) – VEEDER ROOT, MAGNETO-STRICTIVE PROBE
25. RESERVED
26. FUEL POLISHER, SHUT-OFF POLISHER, IF RUN STATUS SIGNAL IS RECEIVED FROM GENERATOR, WIRE TO PUMP CONTROL PANEL.
27. PUMPS
28. FILTERS
29. SCHEDULE 40 STEEL PIPE AND FITTINGS. SOCKET WELDED PIPE WITH FLANGED AND/OR THREADED FITTINGS.
30. ANALOG FUEL GAUGE
31. SPARE TANK OPENING FOR BRIGHT & CLEAR TEST
32. DRAIN VALVES INSTALLED AT LOWEST POINT
33. CHIPKIN BAS BACNET INTERFACE MODULE
34. VEEDER ROOT FUEL MANAGEMENT SYSTEM
35. FUEL POLISHING SYSTEM CONTROL PANEL C/W BACNET COMMUNICATIONS CARD
36. PUMP CONTROL PANEL
37. PUMP CONTROL PANEL
38. PUMP CONTROL PANEL
39. TYPICAL CAT5 SHOWN SHALL BE CAT5e OR CAT6, TYPICAL OF ALL BAS COMMUNICATIONS CABLING UNLESS NOTED OTHERWISE.
40. WALL PIPE SLEEVE (TYP.). ALL WALL SLEEVES SHALL BE WEATHERPROOF AND/OR FILLED WITH FIRE PROOF MATERIAL.
41. PUMP TRAY LEAD DETECTOR (PTD)
42. PUMP FLOW SWITCHES, MFR: GEMS SENSORS & CONTROLS, MODEL: FS-10798

Key Plan:

Consultant:

MORRISON HERSHFIELD
Suite 300, 125 Commerce Valley Drive W.
Markham, ON L3T 7W4
Tel: (416) 499-3110 Fax: (416) 499-9658

Seal:

REV	DESCRIPTION	DATE	BY
4	ISSUED FOR TENDER	JUN 13/19	GF
3	ISSUED FOR BUILDING PERMIT	JUN 3/ 19	GF
1	ISSUED FOR 100% REVIW	APR. 26/19	GF
A	ISSUED FOR CLIENT REVIEW	DEC 13/18	GF

DO NOT SCALE DRAWINGS. CONTRACTOR MUST VERIFY ALL DIMENSIONS AND ADVISE CONSULTANTS OF ANY ERRORS OR OMISSIONS. NO VARIATIONS OR MODIFICATIONS TO WORK SHOWN SHALL BE IMPLEMENTED WITHOUT PRIOR WRITTEN APPROVAL. ALL PREVIOUS ISSUES OF THIS DRAWING ARE SUPERSEDED BY THE LATEST REVISION. ALL DRAWINGS AND SPECIFICATIONS REMAIN THE PROPERTY OF MORRISON HERSHFIELD LIMITED.

Client:

Ontario Shores
Centre for Mental Health Sciences

Project:

NEW POWERHOUSE

700 GORDON STREET, WHITBY, ON L1N 5S9

Sheet Title:

FUEL SYSTEM SCHEMATICS

Drawn By: N.P.	Date: 08/20/18
Designed By: G.F.	Checked By: G.F.
Scale: N.T.S.	File Path: BIM 360:\MH - 1802218 - Ontario Shores Powerhouse\1802218-Ontario Shores Powerhouse-RVT2018-ARCH.rvt
Project No: 1802218	Drawing No: M-703

BIM 360:\MH - 1802218 - Ontario Shores Powerhouse\1802218-Ontario Shores Powerhouse-RVT2018-ARCH.rvt
8/22/2018 1:10:37 AM

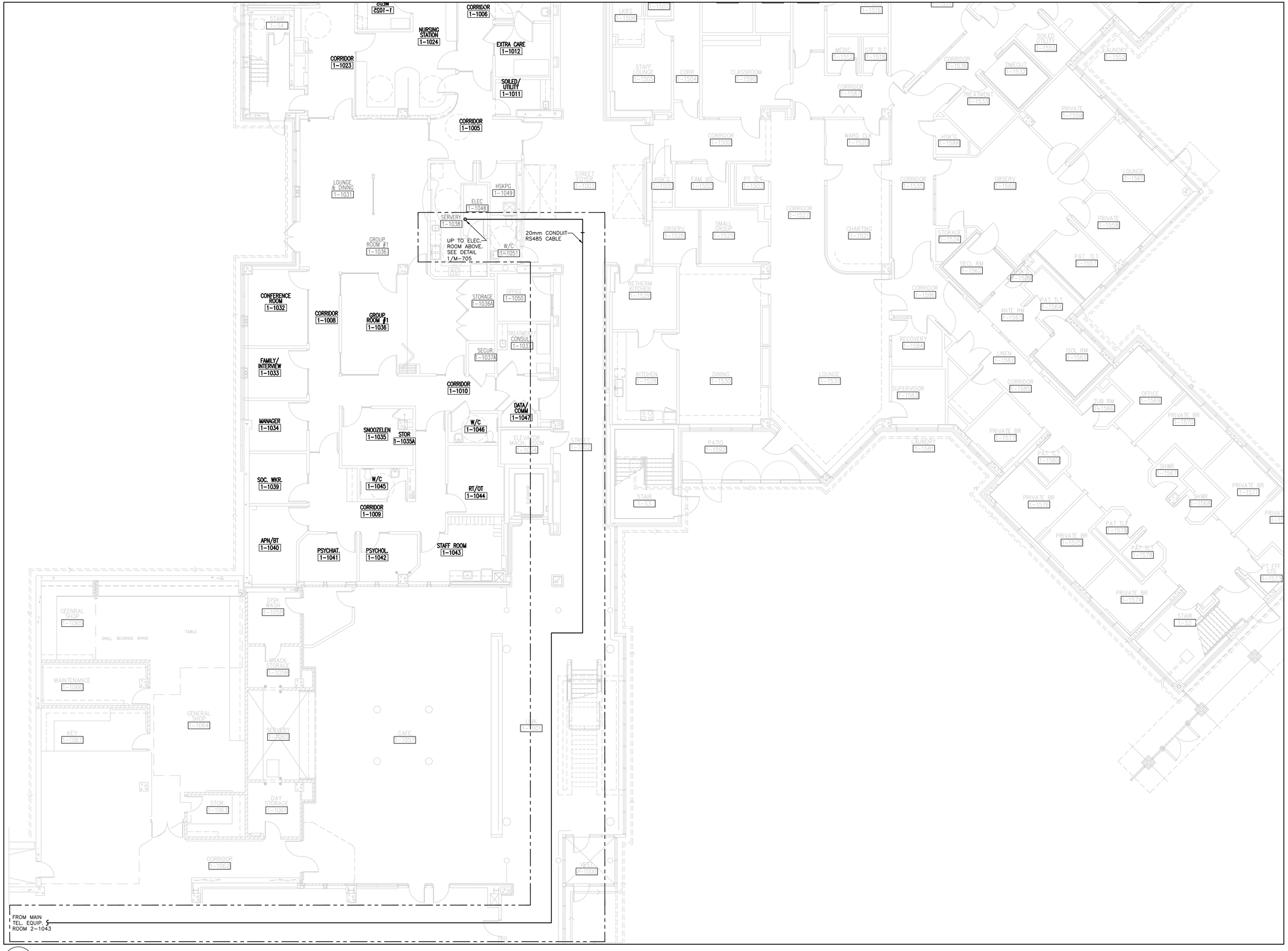

1 M-704 BUILDING 1 LEVEL 1 – MECHANICAL
SCALE: 1:100

Key Plan:

Consultant:

MORRISON HERSHFIELD

Suite 300, 125 Commerce Valley Drive W.
Markham, ON L3T 7W4
Tel: (416) 499-3110 Fax: (416) 499-9658

NORTH

Seal:

REV	DESCRIPTION	DATE	BY
4	ISSUED FOR TENDER	JUN 13/19	GF
3	ISSUED FOR BUILDING PERMIT	JUN 3/ 19	GF
1	ISSUED FOR 100% REVIW	APR. 26/19	GF
A	ISSUED FOR CLIENT REVIEW	DEC 13/18	GF

DO NOT SCALE DRAWINGS. CONTRACTOR MUST VERIFY ALL DIMENSIONS AND ADVISE CONSULTANTS OF ANY ERRORS OR OMISSIONS. NO VARIATIONS OR MODIFICATIONS TO WORK SHOWN SHALL BE IMPLEMENTED WITHOUT PRIOR WRITTEN APPROVAL. ALL PREVIOUS ISSUES OF THIS DRAWING ARE SUPERSEDED BY THE LATEST REVISION. ALL DRAWINGS AND SPECIFICATIONS REMAIN THE PROPERTY OF MORRISON HERSHFIELD LIMITED.

Client:

Ontario Shores
Centre for Mental Health Sciences

Project:

NEW POWERHOUSE

700 GORDON STREET, WHITBY, ON L1N 5S9

Sheet Title:

BUILDING 1 LEVEL 1 - MECHANICAL

Drawn By:	N.P.	Date:	08/20/18
Designed By:	G.F.	Checked By:	G.F.
Scale:	AS SHOWN	File Path:	BIM 360:\MH - 1802218 - Ontario Shores Powerhouse\1802218-Ontario Shores Powerhouse-RVT2018-ARCH.rvt

Project No: 1802218

Drawing No: M-704

BIM 360:/MH - 1802218 - Ontario Shores Powerhouse/1802218-Ontario Shores Powerhouse-RVT2018-ARCH.rvt
8/22/2018 11:00:37 AM

NOTES:

1. SCAN ALL STRUCTURES (WALLS, SLABS, CEILING, ETC.) BEFORE CORING.
2. RUN ALL WIRING IN CONDUIT.
3. FIRE STOP ALL WALL, SLAB, CEILING OPENINGS FOR CONDUITS.

1 M-705 BUILDING 1 LEVEL 2 – MECHANICAL
SCALE: 1:100

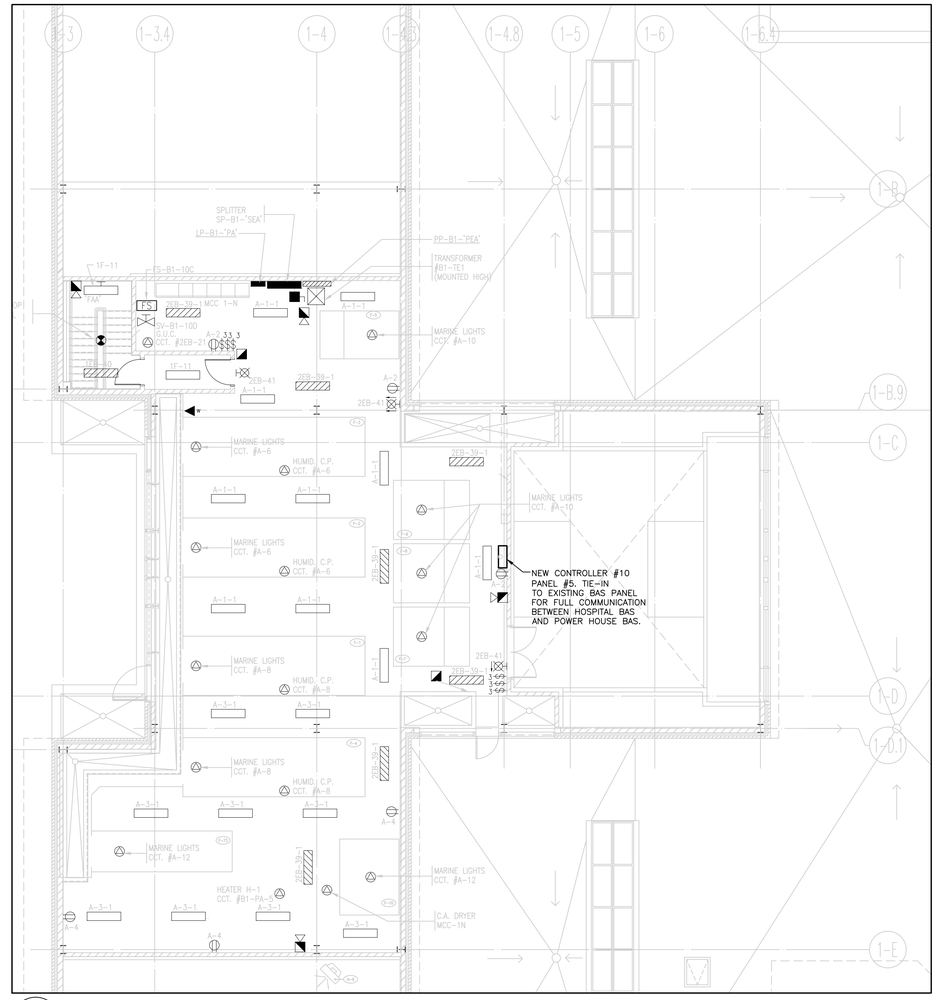

2 M-705 BUILDING 1 PENTHOUSE – ELECTRICAL
SCALE: 1:100

Key Plan:

Consultant:

MORRISON HERSHFIELD

Suite 300, 125 Commerce Valley Drive W.
Markham, ON L3T 7W4
Tel: (416) 499-3110 Fax: (416) 499-9658

NORTH

Seal:

REV	DESCRIPTION	DATE	BY
4	ISSUED FOR TENDER	JUN 13/19	GF
3	ISSUED FOR BUILDING PERMIT	JUN 3/ 19	GF
1	ISSUED FOR 100% REVIW	APR. 26/19	GF
A	ISSUED FOR CLIENT REVIEW	DEC 13/18	GF

DO NOT SCALE DRAWINGS. CONTRACTOR MUST VERIFY ALL DIMENSIONS AND ADVISE CONSULTANTS OF ANY ERRORS OR OMISSIONS. NO VARIATIONS OR MODIFICATIONS TO WORK SHOWN SHALL BE IMPLEMENTED WITHOUT PRIOR WRITTEN APPROVAL. ALL PREVIOUS ISSUES OF THIS DRAWING ARE SUPERSEDED BY THE LATEST REVISION. ALL DRAWINGS AND SPECIFICATIONS REMAIN THE PROPERTY OF MORRISON HERSHFIELD LIMITED.

Client:

Ontario Shores
Centre for Mental Health Sciences

Project:

NEW POWERHOUSE

700 GORDON STREET, WHITBY, ON L1N 5S9

Sheet Title:

BUILDING 1 LEVEL 2 AND PENTHOUSE - MECHANICAL

Drawn By:	N.P.	Date:	08/20/18
Designed By:	G.F.	Checked By:	G.F.
Scale:	N.T.S.	File Path:	BIM 360/I\M1 - 1802218 - Ontario Shores Powerhouse/1802218-Ontario Shores Powerhouse-RVT2018-ARCH.rvt
Project No:	1802218	Drawing No:	M-705

BIM 360/I\M1 - 1802218 - Ontario Shores Powerhouse/1802218-Ontario Shores Powerhouse-RVT2018-ARCH.rvt
8/22/2018 1:10:07 AM

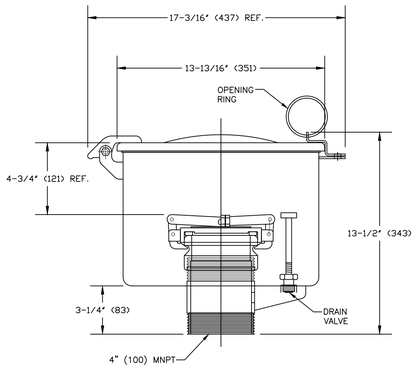

3 M-900 SPILL CONTAINMENT WITH DRAIN, CAP & COLLAR-AST-1
N.T.S.

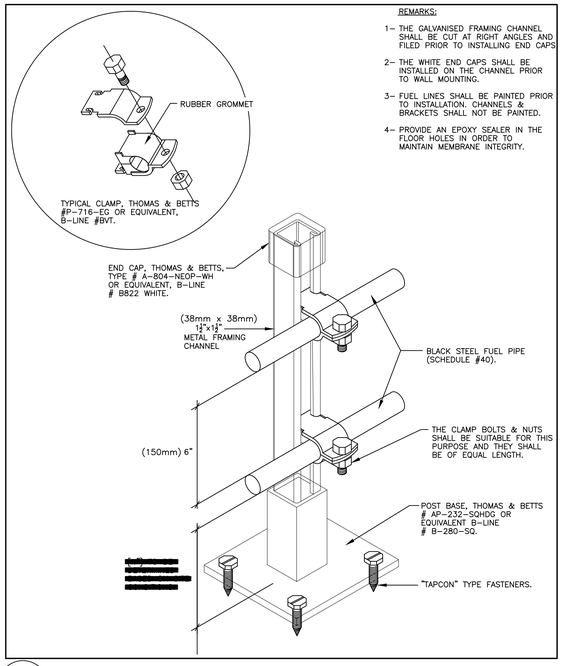

REMARKS:

1- THE GALVANISED FRAMING CHANNEL SHALL BE CUT AT RIGHT ANGLES AND FILED PRIOR TO INSTALLING END CAPS

2- THE WHITE END CAPS SHALL BE INSTALLED ON THE CHANNEL PRIOR TO WALL MOUNTING.

3- FUEL LINES SHALL BE PAINTED PRIOR TO INSTALLATION. CHANNELS & BRACKETS SHALL NOT BE PAINTED.

4- PROVIDE AN EPOXY SEALER IN THE FLOOR HOLES IN ORDER TO MAINTAIN MEMBRANE INTEGRITY.

2 M-900 TYPICAL FLOOR MOUNTING OF SUPPLY & RETURN FUEL LINES
N.T.S.

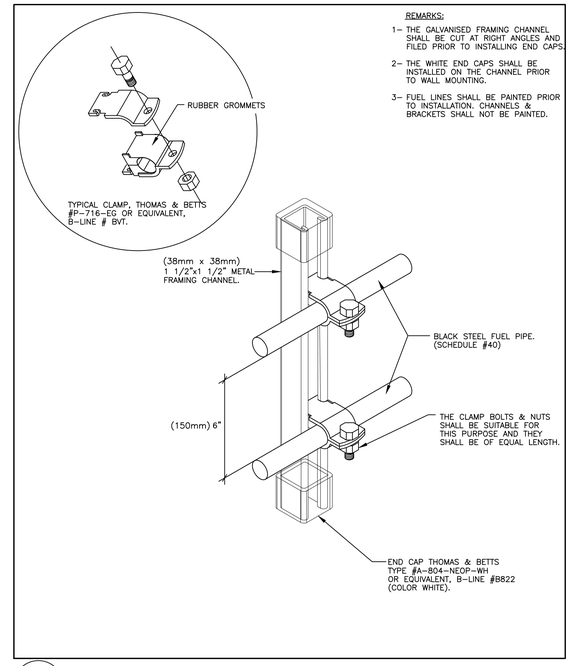

REMARKS:

1- THE GALVANISED FRAMING CHANNEL SHALL BE CUT AT RIGHT ANGLES AND FILED PRIOR TO INSTALLING END CAPS

2- THE WHITE END CAPS SHALL BE INSTALLED ON THE CHANNEL PRIOR TO WALL MOUNTING.

3- FUEL LINES SHALL BE PAINTED PRIOR TO INSTALLATION. CHANNELS & BRACKETS SHALL NOT BE PAINTED.

1 M-900 TYPICAL WALL MOUNTING OF SUPPLY & RETURN FUEL LINES
N.T.S.

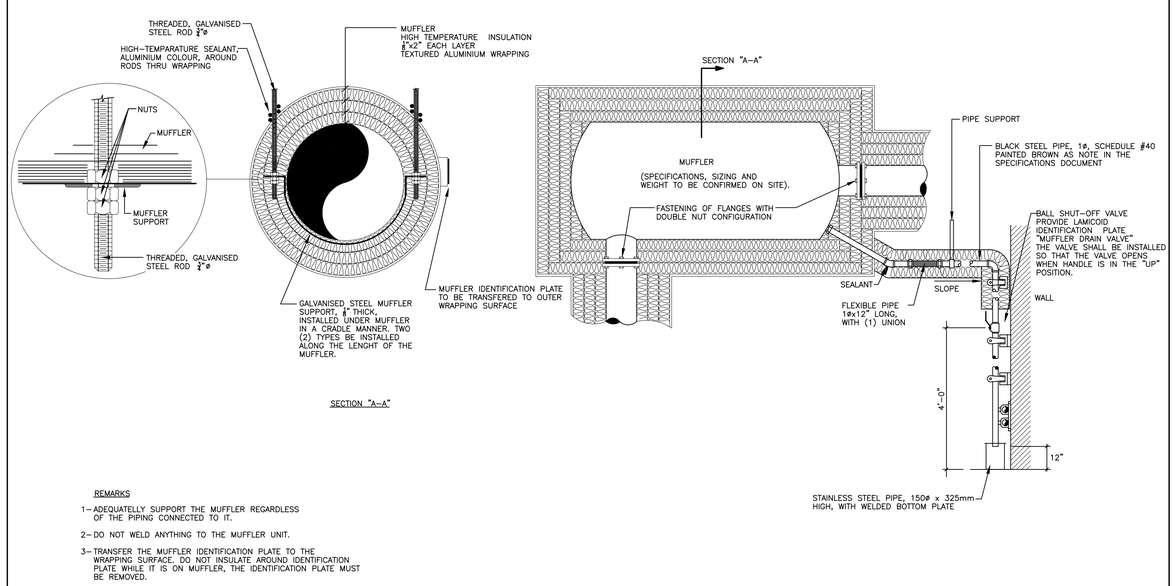

SECTION "A-A"

REMARKS

1- ADEQUATELLY SUPPORT THE MUFFLER REGARDLESS OF THE PIPING CONNECTED TO IT.

2- DO NOT WELD ANYTHING TO THE MUFFLER UNIT.

3- TRANSFER THE MUFFLER IDENTIFICATION PLATE TO THE WRAPPING SURFACE. DO NOT INSULATE AROUND IDENTIFICATION PLATE WHILE IT IS ON MUFFLER, THE IDENTIFICATION PLATE MUST BE REMOVED.

5 M-900 MUFFLER SUSPENSION AND DRAIN DETAIL
N.T.S.

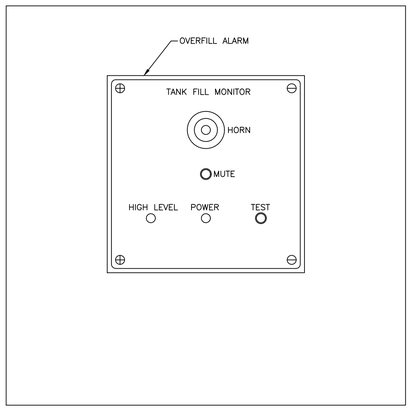

4 M-900 TANK OVERFILL ALARM DETAIL
N.T.S.

Key Plan:

Consultant:

MORRISON HERSHFIELD

Suite 300, 125 Commerce Valley Drive W.
Markham, ON L3T 7W4
Tel: (416) 499-3110 Fax: (416) 499-9658

Seal:

REV	DESCRIPTION	DATE	BY
4	ISSUED FOR TENDER	JUN 13/19	GF
3	ISSUED FOR BUILDING PERMIT	JUN 3/ 19	GF
1	ISSUED FOR 100% REVIW	APR. 26/19	GF
A	ISSUED FOR CLIENT REVIEW	DEC 13/18	GF

DO NOT SCALE DRAWINGS. CONTRACTOR MUST VERIFY ALL DIMENSIONS AND ADVISE CONSULTANTS OF ANY ERRORS OR OMISSIONS. NO VARIATIONS OR MODIFICATIONS TO WORK SHOWN SHALL BE IMPLEMENTED WITHOUT PRIOR WRITTEN APPROVAL. ALL PREVIOUS ISSUES OF THIS DRAWING ARE SUPERSEDED BY THE LATEST REVISION. ALL DRAWINGS AND SPECIFICATIONS REMAIN THE PROPERTY OF MORRISON HERSHFIELD LIMITED.

Client:

Ontario Shores
Centre for Mental Health Sciences

Project:

NEW POWERHOUSE

700 GORDON STREET, WHITBY, ON L1N 5S9

Sheet Title:

STANDARD DETAILS

Drawn By:	N.P.	Date:	08/20/18
Designed By:	G.F.	Checked By:	G.F.
Scale:	N.T.S.	File Path:	BIM 360:/M1 - 1802218 - Ontario Shores Powerhouse/1802218-Ontario Shores Powerhouse-RVT2018-ARCH.rvt
Project No:	1802218	Drawing No:	M-900

BIM 360:/M1 - 1802218 - Ontario Shores Powerhouse/1802218-Ontario Shores Powerhouse-RVT2018-ARCH.rvt
8/20/2018 1:00:29 AM

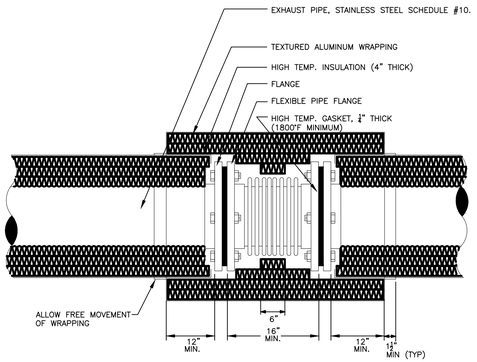

REMARKS

1. INSTALL THE FLEXIBLE JOINT WITH THE TEMPORARY JOINT SUPPORT RODS IN PLACE UNTIL SUCH A TIME THAT THE ENTIRE EXHAUST SYSTEM IS ADEQUATELY SUPPORTED. THIS SHALL PREVENT THE FLEXIBLE JOINT FROM BECOMING DAMMAGED.
2. THE NUTS & BOLTS FOR THE CONNECTION OF THE FLEXIBLE JOINT SHALL HAVE THE SAME CHARACTERISTICS AS THE FLEXIBLE JOINT AND SHALL ALLOW FOR EASY REMOVAL OF THE JOINT.
3. THE FLEXIBLE JOINT SHALL NOT BE DAMMAGED PRIOR TO BEING PUT INTO SERVICE; IF DAMAGED THE JOINT MUST BE REPLACED AT NO EXTRA COST TO THE OWNER.

2 M-901 GENERAL CONFIGURATION OF EXPANSION & COMPRESSION JOINT-INSULATION
N.T.S.

DESCRIPTION

ø EXHAUST (PIPE) mm	A	B	C	D	E	F	G
75	324	273	152	178	13	102	152
100	394	336	190	211	16	102	152
150	467	432	235	297	19	127	203
200	568	514	279	336	19	127	203
250	711	660	349	387	22	127	203
300	864	800	413	476	25	127	203

H: THERMAL EXPANSION OF PIPE, MAXIMUM ½ OF "G".

I: FREE SPACE (NO INSULATION) TO ALLOW PIPE MOVEMENT (MINIMUM, "H" + 50mm).

J: INSULATION OVERLAP (300mm) ATTACHED TO THE GUIDE, WHICH TRAVELS ALONG METALLIC WRAPPING OF THE EXHAUST PIPE.

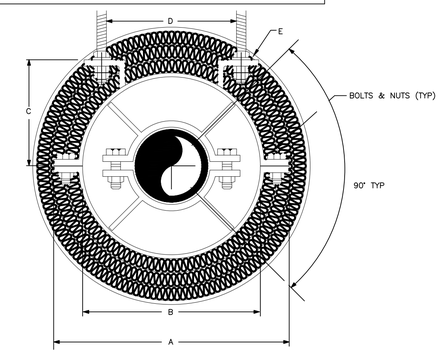

SECTION "A-A"

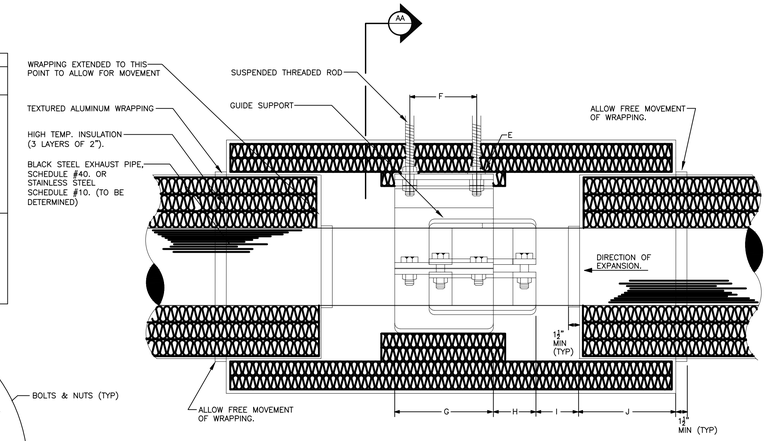

REMARKS

1. THE GUIDE SUPPORTS SHALL BE IDENTICAL TO #PG794, THOMAS & BETTS OR EQUIVALENT "FEXI-TUBE".
2. GUIDE SUPPORT SHALL BE IDENTICAL TO THE PIPE MATERIAL USED (STAINLESS STEEL).
3. CUT SHORT THE INSULATION INSIDE THE GUIDE SUPPORT TO PREVENT DAMMAGE TO INSULATION & ALUMINUM WRAPPING.
4. THE EXHAUST PIPE SHALL HAVE 3 LAYERS (2" EACH) OF INSULATION. DEPENDING ON THE DIAMETER OF THE GUIDE, EACH LAYER OF INSULATION SHALL OVERLAP INSULATED EXHAUST PIPE BY 12".
   EX.: – IF THE GUIDE DIAMETER IS 4" GREATER THAN THE INSULATED EXHAUST PIPE THEN THERE SHALL BE ONE 2" LAYER OF INSULATION OUTSIDE OF GUIDE.
   – IF THE GUIDE DIAMETRE IS 8" GREATER THAN THE INSULATED EXHAUST PIPE THEN THERE SHALL BE TWO 2" LAYERS OF INSULATION OUTSIDE OF GUIDE.

1 M-901 EXHAUST PIPE SUSPENSION DETAIL
N.T.S.

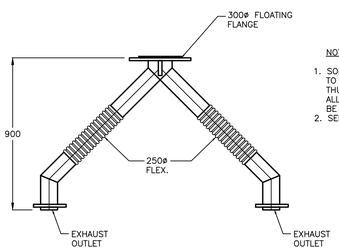

NOTES:

1. SOME VARIATIONS MAY EXIST FOR THIS WYE-CONNECTION TO SUIT VARIOUS GENERATOR MANUFACTURERS. IT IS SHOWN THUS FOR ILLUSTRATION PURPOSES. MAKE THE NECESSARY ALLOWANCES FOR VARIATIONS IN CONSTRUCTION THAT MAY BE REQUIRED.
2. SELECT A LOW PRESSURE DROP WYE.

4 M-901 WYE FLEX. EXHAUST
N.T.S.

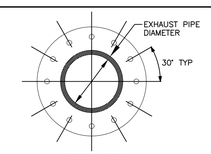

FLANGE-HOLE CONFIGURATION

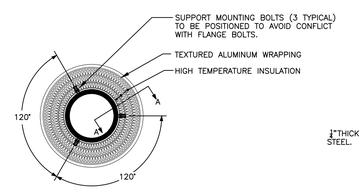

INSULATION SUPPORT PLATE DETAIL

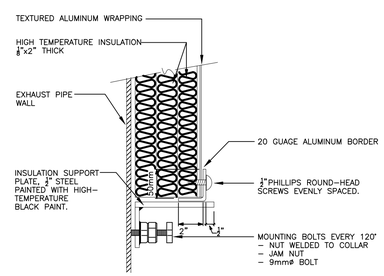

SECTION "A-A"
SUPPORT PLATE

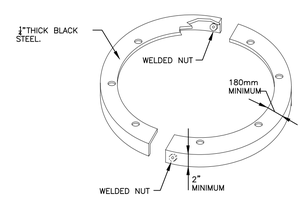

SPACER-DETAIL

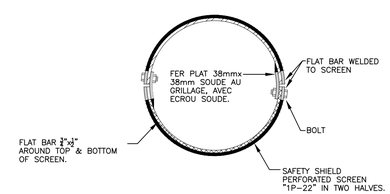

SECTION "B-B"
SAFETY SHIELD

REMARKS

A) THE MUFFLER, THE FLEXIBLE PIPE SAFETY SHIELD SHALL BE INSTALLED BY DIV.#15.
B) THE FLANGE FOLLOWING THE FLEXIBLE PIPE SHALL BE INSTALLED BY DIV.#15.
C) THE FLEXIBLE PIPE SHALL BE PERFECTLY ALIGNED IN BOTH AXIS. IT SHALL NOT BE COMPRESSED AND/OR STRETCHED DURING INSTALLATION ON THE GEN-SET. THE EXHAUST SYSTEM SHALL BE INSTALLED IN THE PRESENCE OF THE GEN-SET MANUFACTURER. ALL FLEXIBLE PIPE ADJUSTMENT SHALL BE MADE BY THE GEN-SET MANUFACTURER IN COORDINATION WITH THE DIV.#15 CONTRACTOR.
D) REFER TO THE SPECIFICATIONS DOCUMENTS FOR MATERIAL CHARACTERISTICS.

3 M-901 DETAILED INSTALLATION OF ENGINE PIPE
N.T.S.

Key Plan:

Consultant:

MORRISON HERSHFIELD

Suite 300, 125 Commerce Valley Drive W.
Markham, ON L3T 7W4
Tel: (416) 499-3110 Fax: (416) 499-9658

Seal:

REV	DESCRIPTION	DATE	BY
4	ISSUED FOR TENDER	JUN 13/19	GF
3	ISSUED FOR BUILDING PERMIT	JUN 3/ 19	GF
1	ISSUED FOR 100% REVIW	APR. 26/19	GF
A	ISSUED FOR CLIENT REVIEW	DEC 13/18	GF

DO NOT SCALE DRAWINGS. CONTRACTOR MUST VERIFY ALL DIMENSIONS AND ADVISE CONSULTANTS OF ANY ERRORS OR OMISSIONS. NO VARIATIONS OR MODIFICATIONS TO WORK SHOWN SHALL BE IMPLEMENTED WITHOUT PRIOR WRITTEN APPROVAL. ALL PREVIOUS ISSUES OF THIS DRAWING ARE SUPERSEDED BY THE LATEST REVISION. ALL DRAWINGS AND SPECIFICATIONS REMAIN THE PROPERTY OF MORRISON HERSHFIELD LIMITED.

Client:

Ontario Shores
Centre for Mental Health Sciences

Project:

NEW POWERHOUSE

700 GORDON STREET, WHITBY, ON L1N 5S9

Sheet Title:

STANDARD DETAILS

Drawn By:	N.P.	Date:	08/20/18
Designed By:	G.F.	Checked By:	G.F.
Scale:	N.T.S.	File Path:	BIM 360:/M1 - 1802218 - Ontario Shores Powerhouse/1802218-Ontario Shores Powerhouse-RVT2018-ARCH.rvt
Project No:	1802218	Drawing No:	M-901

BIM 360:/M1 - 1802218 - Ontario Shores Powerhouse/1802218-Ontario Shores Powerhouse-RVT2018-ARCH.rvt
8/20/2018 1:10:12 AM

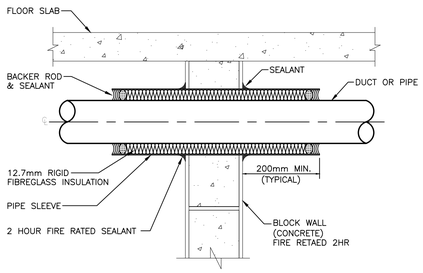

3 M-902 SEALING PIPE PENETRATION THROUGH INTERIOR WALL
N.T.S.

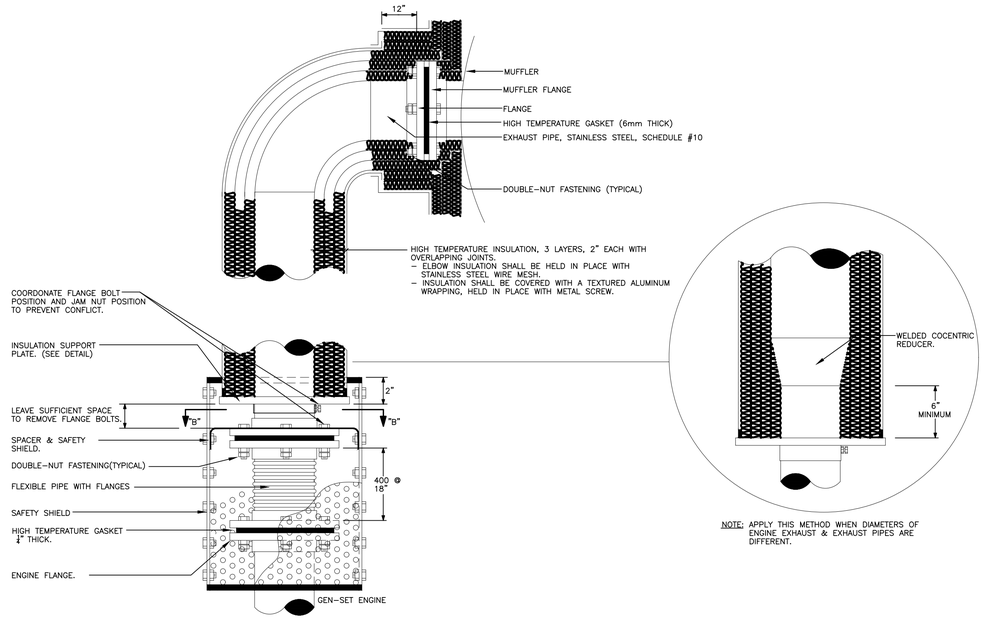

NOTE: APPLY THIS METHOD WHEN DIAMETERS OF ENGINE EXHAUST & EXHAUST PIPES ARE DIFFERENT.

2 M-902 DETAILED INSTALLATION OF ENGINE EXHAUST PIPE
N.T.S.

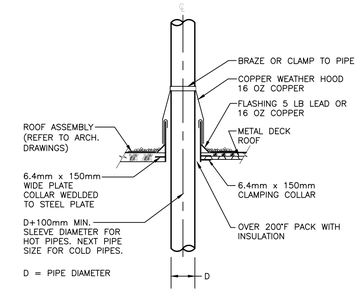

NOTE:

1. MAXIMUM FLUID TEMPERATURE 350°F

1 M-902 WATERPROOF VENT PIPE SLEEVE THROUGH ROOF
N.T.S.

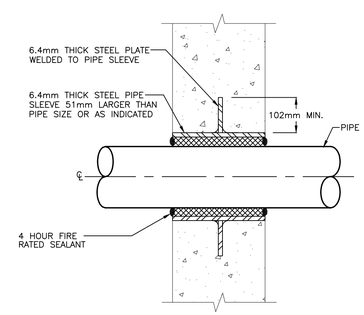

4 M-902 WATERPROOF PIPE SLEEVE THROUGH EXTERIOR WALL
N.T.S.

Key Plan:

Consultant:

MORRISON HERSHFIELD

Suite 300, 125 Commerce Valley Drive W.
Markham, ON L3T 7W4
Tel: (416) 499-3110 Fax: (416) 499-9658

Seal:

REV	DESCRIPTION	DATE	BY
4	ISSUED FOR TENDER	JUN 13/19	GF
3	ISSUED FOR BUILDING PERMIT	JUN 3/ 19	GF
1	ISSUED FOR 100% REVIW	APR. 26/19	GF
A	ISSUED FOR CLIENT REVIEW	DEC 13/18	GF

DO NOT SCALE DRAWINGS. CONTRACTOR MUST VERIFY ALL DIMENSIONS AND ADVISE CONSULTANTS OF ANY ERRORS OR OMISSIONS. NO VARIATIONS OR MODIFICATIONS TO WORK SHOWN SHALL BE IMPLEMENTED WITHOUT PRIOR WRITTEN APPROVAL. ALL PREVIOUS ISSUES OF THIS DRAWING ARE SUPERSEDED BY THE LATEST REVISION. ALL DRAWINGS AND SPECIFICATIONS REMAIN THE PROPERTY OF MORRISON HERSHFIELD LIMITED.

Client:

Ontario Shores
Centre for Mental Health Sciences

Project:

NEW POWERHOUSE

700 GORDON STREET, WHITBY, ON L1N 5S9

Sheet Title:

STANDARD DETAILS

Drawn By:	N.P.	Date:	08/20/18
Designed By:	G.F.	Checked By:	G.F.
Scale:	N.T.S.	File Path:	BIM 360:\M1 - 1802218 - Ontario Shores Powerhouse\1802218-Ontario Shores Powerhouse-RVT2018-ARCH.rvt

Project No: 1802218

Drawing No: M-902

BIM 360:/M1 - 1802218 - Ontario Shores Powerhouse/1802218-Ontario Shores Powerhouse-RVT2018-ARCH.rvt
8/22/2018 1:10:23 AM

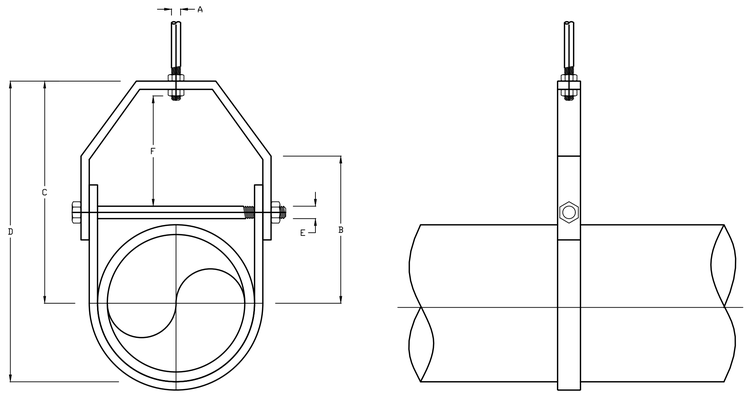

ENGINEERING DATA				DIMENSION DATA				MATERIAL	
PIPE SIZE	REC HGR SPACING	HNAGER ROD DIA(A)	ROD TAKE-OUT(B)	C	D	E	F	UPPER	LOWER
1/2"	5'-0"	3/8"	1 1/4"	1 3/4"	2 1/4"	1/4"	1/4"	16GAx7/8	16gax7/8
3/4"	6'-0"	3/8"	1 7/8"	2 3/4"	3 5/16"	5/16"	7/8"	1/8 x 1	1/8 x 1
1"	7'-0"	3/8"	1 1/8"	1 13/16"	2 5/16"	5/16"	7/8"	1/8 x 1 1/8	1/8 x 1 1/8
1 1/4"	8'-0"	3/8"	1 1/8"	1 13/16"	2 5/16"	3/8"	3/4"	3/16 x 1	3/16 x 1
1 1/2"	9'-0"	3/8"	1 1/8"	1 13/16"	2 5/16"	3/8"	3/4"	3/16 x 1	3/16 x 1
2"	10'-0"	3/8"	1 1/8"	1 13/16"	2 5/16"	3/8"	1 1/4"	3/16 x 1	3/16 x 1
2 1/2"	11'-0"	1/2"	1 1/8"	1 13/16"	2 5/16"	3/8"	1 1/4"	3/16 x 1 /1/4	3/16 x 1 1/4
3"	12'-0"	1/2"	1 1/8"	1 13/16"	2 5/16"	7/16"	1 5/8"	3/16 x 1 /1/4	3/16 x 1 1/2
4"	14'-0"	5/8"	1 1/8"	1 13/16"	2 5/16"	1/2"	1 1/2"	3/16 x 1 1 /2	3/16 x 1 1/2
6"	17'-0"	3/4"	1 1/8"	1 13/16"	2 5/16"	1/2"	2"	5/16 x 1 /1/2	3/16 x 1 1/2
8"	19'-0"	3/4"	1 1/8"	1 13/16"	2 5/16"	5/8"	2 7/8"	3/8 x 1 1/2	1/4 x1 1/2
10"	22'-0"	7/8"	1 1/8"	1 13/16"	2 5/16"	3/4"	2 3/4"	3/8 x 2	1/4 x 2
12"	23'-0"	7/8"	1 1/8"	1 13/16"	2 5/16"	3/4"	2 7/8"	1/2 x 2	2/3 x 2

2 M-903 STANDARD CLEVIS HANGER
N.T.S.

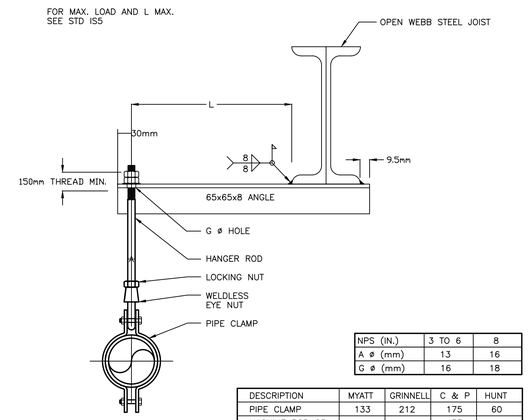

NPS (IN.)	3 TO 6	8
A ø (mm)	13	16
G ø (mm)	16	18

DESCRIPTION	MYATT	GRINNELL	C & P	HUNT
PIPE CLAMP	133	212	175	60
MACHINE ROD OR	–	–	133	–
ALL-THREAD ROD	432	146	94	99
WELDLESS EYE NUT	480	290	279	88

1 M-903 PS-01 WELDED BRACKET WITH HANGER (UNINSULATED 3-8")
N.T.S.

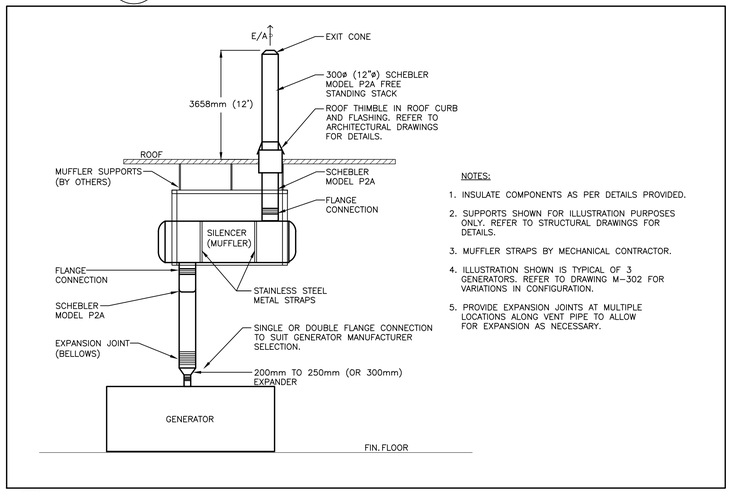

NOTES:

1. INSULATE COMPONENTS AS PER DETAILS PROVIDED.
2. SUPPORTS SHOWN FOR ILLUSTRATION PURPOSES ONLY. REFER TO STRUCTURAL DRAWINGS FOR DETAILS.
3. MUFFLER STRAPS BY MECHANICAL CONTRACTOR.
4. ILLUSTRATION SHOWN IS TYPICAL OF 3 GENERATORS. REFER TO DRAWING M-302 FOR VARIATIONS IN CONFIGURATION.
5. PROVIDE EXPANSION JOINTS AT MULTIPLE LOCATIONS ALONG VENT PIPE TO ALLOW FOR EXPANSION AS NECESSARY.

3 M-903 GENERATOR EXHAUST SYSTEM – ELEVATION
N.T.S.

Key Plan:

Consultant:

MORRISON HERSHFIELD

Suite 300, 125 Commerce Valley Drive W.
Markham, ON L3T 7W4
Tel: (416) 499-3110 Fax: (416) 499-9658

Seal:

REV	DESCRIPTION	DATE	BY
4	ISSUED FOR TENDER	JUN 13/19	GF
3	ISSUED FOR BUILDING PERMIT	JUN 3/ 19	GF
1	ISSUED FOR 100% REVIW	APR. 26/19	GF
A	ISSUED FOR CLIENT REVIEW	DEC 13/18	GF

DO NOT SCALE DRAWINGS. CONTRACTOR MUST VERIFY ALL DIMENSIONS AND ADVISE CONSULTANTS OF ANY ERRORS OR OMISSIONS. NO VARIATIONS OR MODIFICATIONS TO WORK SHOWN SHALL BE IMPLEMENTED WITHOUT PRIOR WRITTEN APPROVAL. ALL PREVIOUS ISSUES OF THIS DRAWING ARE SUPERSEDED BY THE LATEST REVISION. ALL DRAWINGS AND SPECIFICATIONS REMAIN THE PROPERTY OF MORRISON HERSHFIELD LIMITED.

Client:

Ontario Shores
Centre for Mental Health Sciences

Project:

NEW POWERHOUSE

700 GORDON STREET, WHITBY, ON L1N 5S9

Sheet Title:

STANDARD DETAILS

Drawn By:	N.P.	Date:	08/20/18
Designed By:	G.F.	Checked By:	G.F.
Scale:	N.T.S.	File Path:	BIM 360:\MH - 1802218 - Ontario Shores Powerhouse\1802218-Ontario Shores Powerhouse-RVT2018-ARCH.rvt
Project No:	1802218	Drawing No:	M-903

BIM 360://MH - 1802218 - Ontario Shores Powerhouse/1802218-Ontario Shores Powerhouse-RVT2018-ARCH.rvt
6/22/2018 11:02:37 AM